CHAMPIONS START HERE

CX65

2012

Cobra MOTO

Service Owners Parts Tuning

For **parts orders** contact your local dealer

To locate your closest Cobra dealer
log on to
www.cobramotorcycle.com
or call
(517) 437-9100

If you need **technical assistance**
contact your local dealer or call
the Cobra Technical Support Hotline at
(517) 437-9100

Autolite

MOTUL

Cobra Moto, LLC
240 Uran Street
Hillsdale, Michigan 49242

DISCLAIMER OF WARRANTY

This motorcycle is sold "as is" with all faults, obvious or not. There are no warranties expressed or implied, including any warranty of merchantability and warranty of fitness for any particular purpose.

"WARNING"

THE COBRA CX65 IS A COMPETITION MODEL ONLY AND IS NOT MANUFACTURED FOR, NOR SHOULD IT BE USED ON PUBLIC STREETS, ROADS OR HIGHWAYS.

THE USE OF THIS BIKE SHOULD BE LIMITED TO PARTICIPATION IN SANCTIONED COMPETITION EVENTS UPON A CLOSED COURSE BY A SUFFICIENTLY SKILLED RIDER AND SHOULD NOT BE USED FOR GENERAL OFF-ROAD RECREATIONAL RIDING.

IMPROPER USE OF THIS MOTORCYCLE CAN CAUSE INJURY OR DEATH.

THIS BIKE IS INTENDED FOR EXPERIENCED RACERS ONLY AND NOT FOR BEGINNERS.

IT IS YOUR RESPONSIBILITY AS THE OWNER OF THIS COBRA MOTORCYCLE OR AS THE PARENT, OR LEGAL GUARDIAN OF THE OPERATOR, TO KEEP THIS COBRA MOTORCYCLE IN PROPER OPERATING CONDITION.

THIS BIKE WAS DESIGNED FOR RIDERS THAT WEIGH LESS THAN 110 LBS WITH FULL RIDING GEAR AND SHOULD NOT BE OPERATED BY RIDERS THAT WEIGH MORE THAN THAT.

BE SURE THAT THE RIDER ALWAYS WEARS ADEQUATE SAFETY GEAR EVERYTIME HE OR SHE RIDES THEIR COBRA MOTORCYCLE.

IMPORTANT SAFETY NOTICE

⚠ WARNING

Failure to follow WARNING instructions could result in severe injury or death to the machine operator, a bystander, or a person inspecting or repairing the machine.

CAUTION:
A CAUTION indicates special precautions that must be taken to avoid damage to the machine.

NOTE:
A NOTE provides key information to make procedures easier or clearer.

Table of Contents

General Information

Specifications - General

Items	CX65
Dimensions	
Wheelbase	40.9” (1040mm)
Wheel size	12” (305mm) rear, 14” (356mm) front
Seat height	29.9” (760mm)
Engine	
Type	2-stroke, single cylinder, reed valve
Cooling system	Liquid-cooled
Coolant	50/50 antifreeze-coolant / distilled water
Displacement	64.9 cc
Bore and stroke	44.5 mm x 41.7 mm
Ignition system	Electronic, digital advance
Spark plug	Autolite 4063 or XS4063
Gap	0.023” – 0.025” (0.58 – 0.64 mm)
Ignition timing	Digital advance (set at “0” timing mark)
Fuel type	High octane pump gasoline
Premix Oil type	*Motul 800 2T*
Premix oil ratio after break-in	*Motul 800 2T Off Road*, 50:1 to 63:1 All other premix oil at 32:1 to 40:1
Carburetion	26 mm VM Mikuni
60Main Jet / Slow (Pilot) Jet	240 / 42.5
Needle	5I 14 - 4
Float Height	21.1 ± 1.0
Transmission	6 speed
Final drive ratio	14/45
Chain	116 links 420
Transmission / clutch oil type	Quality gear lubricant, or Cobra clutch milk Do Not Run Automotive Motor Oil
Quantity	530 ml (18.0oz)
Chassis	
Front tire	60/100 – 14
Rear tire	80/100 – 12
Front fork	Marzocchi 35mm USD, Compression adjustable
Fork oil type	SAE 10 weight
Fork oil amount	210 ml (7.1oz)
Spring Preload Length	178mm (49 N/mm
Rear shock	Compression Low 9 of 19 out, High 8 of 16 out Rebound 26 of 29 clicks out, Race sag 87mm

Optional Components

Weight of Rider (lb)	Fork Spring	Shock Spring
less than 70 lb	0.24 kg/mm KCC60024	42 N/MM (240 lb/in) SCC60240P (white)
75-85 lb	0.26 kg/mm KCC60026	45 N/MM (260 lb/in) SCC60260PY stock (yellow)
85-100 lb	0.28 kg/mm KCC60028	49 N/MM (280 lb/in) SCC60280PG (gold)
Greater than 100		53 N/MM (300 lb/in) SCEX1300 (red)

Specifications - Torque Values

Fastener	Torque Value			Size & Remarks
	ft-lb	in-lb	Nm	
Cylinder head nuts	9	110	12	M6 x 1.0
Cylinder nuts	22	265	30	M8 x 1.25**
Crankcase bolts	9	110	12	M6 x 1.0
PV cable Nut	9	110	12	M8 x 1.0
PV Jam Nut	9	110	12	M8 x 1.0
PV Cap Screws	3	35	4	M5 x 0.8
Exhaust Flange	5	60	6	M6 x 1.0
Spark plug	(SP)	(SP)	(SP)	M14 x 1.25
Stator bolts	2.1	25	2.8	M5 X 0.8
Stator cover bolts	1.7	20	2.3	M4 X 0.75
Clutch cover bolts	5.8	70	7.9	M6 X 1.0
Clutch nut	40	480	54	M10 x 1.25
Front axle bolt	10	120	13.5	M14 x 2.0
Front axle pinch bolt	7.4	88.5	10	M6 X 1.0
Engine mount bolts	22	265	30	M8 X 1.25
Swingarm Pivot	21	250	28	M12 X 1.5
Intake manifold bolts	4.6	55	6.2	M6 X 1.0
Rear Axle Bolt	25	300	34	M14 X 1. 5
Rear Sprocket Bolts	20	240	27	M8 X 1.25
Triple clamp (top)	9	108	12	M6 x 1.0
Triple clamp (bottom)	6	72	8	M6 x 1.0
Fork cap	15	177	20	
Fork Damper Nut	11	133	15	
Ignition rotor nut	33	400	45	M10 x 1.25*

***** Apply high strength thread locking agent when installing
** Use a ‘crows foot’ attachment oriented 90° to the torque wrench

(SP) To apply the proper torque to the spark plug when inserting, one must first screw the spark plug in until the metal gasket ring causes resistance and then turn another 1/8 to ¼ turn.

Break-In Procedure

Your Cobra CX65 is a close-tolerance high performance machine and break-in time is very important for maximum life and performance. The CX65 can be ridden hard after the first ½ hour break-in time.

Cobra recommends *Motul 800 T2* premix oil with high octane pump gas mixed at 50:1 (50 ml oil to 1.3 gallon of gas, or 38ml oil to 1 gallon of gas). Other brands of oil should be mixed at 32:1 for break-in.

CAUTION:
Failure to use proper fuel, oil, or fuel/oil mixture may result in premature engine wear or damage to the machine.

Adhering to the following break-in schedule will result in long lasting high performance machine.

- Start bike on stand
- First 5 minute period, operate the bike on the stand with a combination of idle and high RPM operation. (avoid prolonged high RPM but spin the rear wheel good at least once or twice per minute)
- Allow bike to cool
- Ride for 15 minutes maximum (avoid prolonged high RPM operation and avoid abusing the clutch).
- Cool and inspect bike for loose fasteners.
- Check & retighten wheel spokes
- Next ½ hour of operation, avoid prolonged operation at Wide Open Throttle.
- After 1 hour of operation
    - Check for loose bolts and nuts on the bike and retighten as necessary (proper toque values are listed under Specifications).
    - Clean the carburetor bowl.
    - Change the transmission / clutch lubricant.
- After 8 hours of operation
    - Change the fork oil.
    - Have a Certified Cobra Mechanic change the shock oil.
- Your bike is now ready for the highest level of competition!

NOTE:
During break-in the bike will likely lose some engine coolant through the radiator overflow hose. Losing up to 4 oz (120 ml, ½ cup) is normal. Proper coolant level will cover the top of the radiator cores. Removing the radiator cap and looking inside is the only way to check the coolant level.

⚠ WARNING
Never open the radiator cap of a machine that has a hot or warm engine or one that has recently been ridden. Burning and scalding could occur.

CAUTION:
It is important that the radiator cap is installed correctly and completely otherwise engine damage could occur.

Starting Procedure

Before starting the machine inspect the following:

- Check for proper tire pressure in both tires.
- Observe the chain tension and adjust if necessary.
- Observe the coolant level and fill if necessary.
- Verify that the chain rollers and sliders do not have improper wear.
- Verify that the handlebars are tight.
- Check the throttle for smooth operation and sound closing.
- Check for loose bolts and nuts, and re-torque as necessary.
- Verify that the air filter is clean and properly saturated with oil.
- Insure that the fuel tank contains an adequate volume of fuel / oil mixture to complete the distance required. (High octane pump gas with Cobra's specially formulated *Cobra Venom 2-cycle Race Oil*)
- Turn the fuel on by rotating the fuel petcock lever to the vertically downward position.

CAUTION:
For best results from your Cobra Motorcycle use only the recommended fuels. 'Race' fuels can be used, however, they are not required with the stock engine, and the engine will require addition attention to maintain proper jetting as weather condition change throughout the day.

⚠ WARNING
Always wear a helmet and other protective riding gear.

When your pre-ride inspection is complete the bike may be started. For a cold engine follow this procedure.

1. Place the motorcycle on a stand of sufficient strength that positions the motorcycle in a level upright position with the rear wheel off the ground.
2. Engage the choke by pulling out on the choke button until it stops.
3. Kick start the engine.
4. Rev the engine in short spurts, turning the throttle no more than 1/4 open until the engine will run without the choke.
5. Verify a functional engine shut-off switch by shutting off the engine.
6. Restart the engine and proceed with riding when the engine is sufficiently warm (i.e. the side of the cylinder is warm to touch).

CAUTION:
Never rev an engine full throttle when it's cold or slightly warmed up. This may lead to premature wear of engine components or complete cold seizure of the engine.

CAUTION:
Cobra recommends that you tell your child to take it easy the first couple of minutes in practice until the engine comes up to full operating temperature.

Maintenance

It is important that you adhere to this maintenance schedule so as to promote the longevity of your Cobra Motorcycle.

Tips

1. Cobra lubricants:
    a. Use only high quality transmission oil designed specifically for two-stroke racing engines.
    b. *Motul 800 2T Off Road* oil is the recommended **premix oil** because:
        - Its Ester base leaves a film on all parts at all times. No metal to metal startups or corrosion potential.
        - Exception film strength over petroleum based oils or synthetic blends.
        - Easily atomizes and burns completely.
        - Does not fall out of suspension from premix in cold weather.
        - Produces virtually no coking deposits, leaving pistons, rings and heads extremely clean with minimal pipe 'spooge'.
2. Fill your transmission only with the recommended amount of oil. Overfilling may lead to premature seal failure.
3. The cylinder base gasket has been 'fitted' for your engine. See the service section of this manual for instructions how to properly size a base gasket during an engine rebuild.
4. Evaluate the bikes jetting only after it has been warmed up to race temperatures.
5. A properly maintained machine is safer, faster, and more fun to ride.
6. New chains will stretch on first use. Never install a new chain prior to a race. Always 'break' them in during practice.
7. Your Cobra Motorcycle has a 10 digit VIN (Vehicle Identification Number). The first two digits indicate the model and the seventh indicates the model year (MY).
    a. Example, CXxxxx7xxx is a 2007 MY CX65.

Schedule

- Prior to each ride
    - Check the air filter (clean and re-oil as necessary).
    - Insure the smooth operation of the throttle cable (throttle soundly 'clacks' shut).
    - Check for frayed strands of the throttle cable inside the throttle housing and replace if necessary.
    - Check for adequate tire pressures and adjust if necessary.

- Check all nuts and bolts for proper torque and re-torque if necessary.
- Spray all moving parts with WD40 or other water displacing oil.
- Check drive chain for
  - Proper tension and adjust if necessary.
  - Adequate lubrication and lubricate if necessary.
- Insure that the ignition stator and rotor are clean and dry.
- Check the frame for cracks in the metal or cracks in the paint that might indicate that the metal has been stressed beyond it's safe limits. Replace or get properly re-welded as necessary.
- Check the spokes for tightness and adjust if necessary.
- Check the rims and hubs for signs of stress, like cracks around the rim, spokes and hub.
- Equalize the pressure in the forks with atmosphere.

- Every 2 hours of operation
  - Replace the transmission oil.
  - Check spoke tension
- Every 10 hours of operation
  - Replace the fork oil.
  - Have the shock oil replaced by a Certified Cobra Mechanic.

CAUTION:
If you ever need to weld anything on the bike, disconnect the spark plug cap, unplug the ignition, disconnect the kill switch, scrape the paint bare near the area to be welded and put the ground clamp as close to the area to be welded as possible.

⚠ WARNING
Be sure the fuel tank and carburetor have been removed and safely located away from the welding process.

The frame is a combination of HSLA steel and 4130 Chrome Moly and it is important to weld it with the proper rod and heat settings set as light as possible. Cobra recommends replacing the frame with a new one if the old one becomes damaged. Use ER70S6 filler if welding on the frame.

Replacing Transmission / Clutch Lubricant

Tools needed:
- 18 oz, of high quality transmission oil, or Cobra clutch milk
- 8 mm Allen wrench

CAUTION:
General automotive motor oil has frictional modifiers which will cause premature wear and failure of the clutch.

Procedure:
1. Begin this procedure with a bike that has been ridden more than 5 minutes but less than 10 minutes. It is desired to have the engine warm enough so

that the oil is ‘runny’ but not so hot that there is risk of being burned by the engine or the oil.

⚠ WARNING

Hot oil and hot components on the motorcycle may cause burns.

2. Lean the bike against something or set on stand with oil drain hole.
3. Using a 8mm Allen wrench, remove the oil drain bolt located on the right side of the engine, on the clutch cover, near the brake lever (See Figure 1).

NOTE: You may need to adjust the brake pedal (up or down) to gain access to the drain bolt.

4. After it has drained, reinstall the bolt being sure that the rubber gasket is in place. Torque to 11 Nm (8 ft-lb).
5. Remove oil fill plug with an 8mm Allen wrench.
6. Carefully pour 16 oz (470 ml) of transmission oil into the oil fill opening.
7. Reinstall the oil fill plug making sure the rubber gasket is in place.

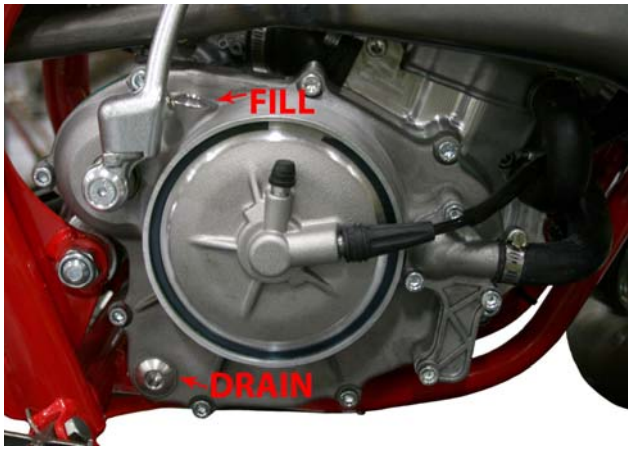

Figure 1

NOTE: Filling after an engine rebuild required additional transmission fluid. If the engine is completely flushed of oil, refill with 18 oz (530ml).

⚠ WARNING

Always capture and dispose of used oil properly (all auto parts stores accept used oil). Dumping oil on the ground is illegal, inconsiderate, and can get you disqualified from a race weekend quicker than cutting the track.

Chain adjustment

Tools required for chain adjustment

- 22 mm wrench or socket
- 2 - 11 mm open-end wrenches

1. Make sure that the rear wheel is aligned properly.
2. For proper adjustment, the chain should have 35 mm free movement just behind the chain block with no load on the bike (Figure 2)


Figure 2

CAUTION:
Sit on the bike and verify that the chain has a minimum of 12mm (1/2”) free movement when the chain is at its tightest point.


Figure 3

3. If the chain requires adjusting, loosen the axle with a 22mm wrench, and loosen the jam nut with an 11mm wrench. Tighten the chain by rotating the adjustor bolts clockwise (CW) or loosen the chain by rotating the adjustor bolts (CCW).
4. Put a rag between the sprocket and chain, and roll the wheel backward to pull the chain adjustor blocks tightly against the adjustor bolts (Figure 3).
5. Retighten the axle bolt to 25 ft-lb (34 Nm).
6. Retighten the adjustor jam nuts.

CAUTION:
Always check rear brake adjustment and free-play after adjusting the chain.

Air Filter Cleaning


Figure 4

Tools recommended for air filter maintenance:
- 5 mm hex key (Allen)
- Foam filter oil

1. Removed seat with the 5mm hex key.
2. Unhook the air filter wire from its perch
3. Carefully remove the air filter and frame out the top of the airbox making sure not to dislodge any dirt into the intake tract.
4. Clean the filter in a nonflammable solvent to remove the filter oil.

⚠ WARNING
Do not clean the air filter with gasoline or other highly volatile petroleum product. Diesel fuel, mineral spirits, or kerosene would be preferred but caution should still be taken.


Figure 5

5. Clean the filter in hot soapy water to remove all dirt particles.
6. Allow it to dry thoroughly.
7. Saturate with filter oil and remove excess.

NOTE: It is very important to keep the air filter clean and properly oiled with high quality water-resistant foam filter oil. Apply oil consistently because varied amounts of oil will affect carburetor jetting.

8. **Reinstall** the filter assembly by pushing it down and forward into the airbox making sure the lip of the filter cage is properly seated into its receptacle (figure 5). Reinstall the air filter cap and holding wire.

CAUTION:
Double check to insure that the filter is pushed in tight at the bottom
NOTE: Make sure you change or clean your filter after each moto. We recommend carrying multiple filters in your toolbox, one for each practice session and moto.

Fork Oil Replacement

Requirements
- 19mm and 27mm combination wrench
- 6mm and 10mm hex key (Allen)
- Flexible retrieving tool
- 10w fork oil (approximately 210cc per fork leg)

Disassembly
1. Remove the front wheel and front brake caliper.
2. Remove the fork legs from the triple clamps.
3. Perform the following on each fork leg:
   a. Remove the fork cap from the fork tube using a 27mm wrench.
   b. Lower the fork tube to expose the fork spring.
   c. Pull the fork spring down from the fork cap to expose the damper rod lock nut. Secure this nut using a 19mm wrench.
   d. With a 19mm wrench on the damper rod nut, use a 27mm wrench to free the fork cap from the damper rod.
   e. Remove the 19mm wrench and allow the damper rod to fall into the damper tube.
   f. Remove the fork spring and spacer.
   g. Invert the fork to allow the oil to drain. Pump the damper rod assembly several times to help the oil drain.

Assembly
1. Completely collapse the outer fork tube onto the stanchion tube. Add enough oil to the fork to fill the cartridge tube. Pump the damper rod up and down slowly to help the assembly fill with oil.
2. Once the cartridge assembly is bled, continue to fill the fork with oil until it is 120mm +/- 2.5mm from the top of the fork.
3. Install the fork spring.
4. Use a flexible retrieving tool to pull the damper rod up through the fork spring. Pull the fork spring down from the damper rod to expose the damper rod lock nut. Secure this nut using a 19mm wrench.
5. Install the spacer and fork cap to the damper rod. Ensure that the fork cap is completely threaded onto the damper rod before it makes contact with the lock nut. Torque the damper rod lock nut to 15N-m (11ft-lb).
6. Install the fork cap to the fork tube. Torque the fork cap to 20Nm (15ft-lb).

7. Pump the fork leg several times to verify that it operates smoothly.
8. Install each leg back into the triple clamp. Torque each pinch bolt to 11N-m (8 ft-lb) making sure both legs are set to the same height in the clamps.
9. Install the front wheel, and torque the axle to 13.5N-m (10 ft-lb).
10. Drop the bike onto the ground, engage the front brake, and push up and down on the handlebars several time to ensure that the front forks and the front wheel are properly aligned with each other.
11. Tighten the axle pinch bolts to 10N-m (7.4 ft-lb).

Ignition Timing

The ignition timing value for the CX65 is 0° retarded from the standard base reference (0°). This can be verified by removing the ignition cover and looking as shown in the figure below.

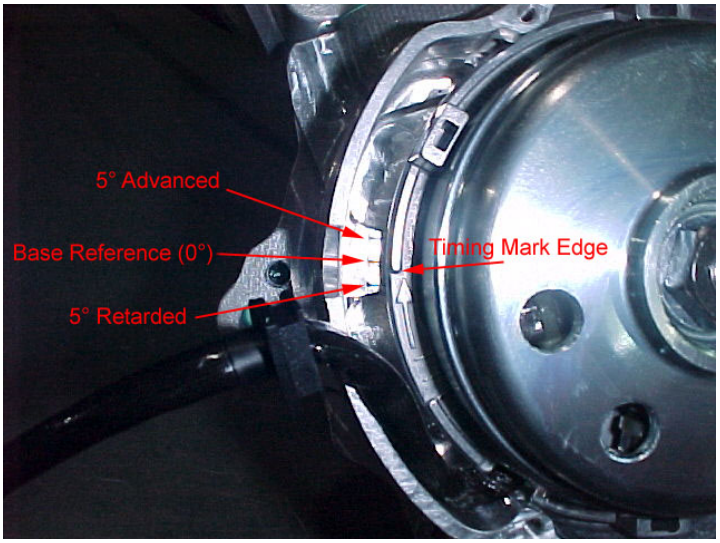

The center mark on the cases is the standard base reference timing mark (0°), and the other two large marks are 5° advanced and retarded. The small timing marks between 0 & 5° is 2.5°.

To change the timing, one must remove the flywheel with Cobra 65 flywheel puller # MCMUTL05. After the flywheel has been removed, the timing can be adjusted by loosening the stator bolts and rotating the stator to the desired position.

Parts

Parts – Airbox & Inlet System

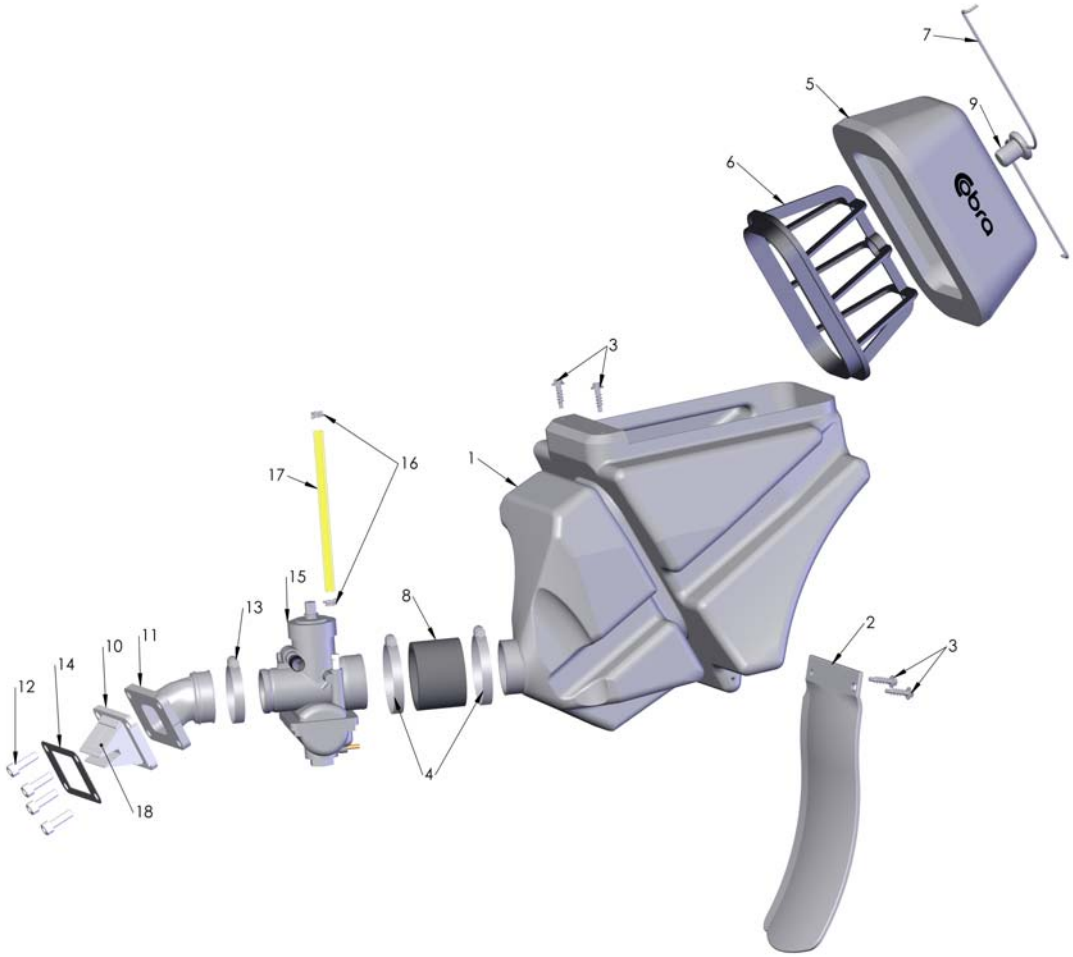

Coolant System		
REF #	PART #	DESCRIPTION
1	RCC60007	AIRBOX
2	TCC60008	MUD FLAP
3	HCSP0003	SCREW - PLASCREW
4	MCKGHO03	CLAMP, AIR BOOT TO AIR BOX
5	RCC60002	AIR FILTER
6	RCC60003	AIR FILTER CAGE
7	RCC60004	AIR FILTER WIRE
8	RCC60014	AIR BOOT, CARB TO AIRBOX
9	RCC60006	AIR FILTER CAP
10	ECC60006	REED ASSEMBLY
11	ECC60007	INLET MANIFOLD
12	HCBC0602	M6x20mm SOCKET HEAD CAP SCREW
13	MCC60003	CLAMP, MANIFOLD TO CARB
14	ZCC60021	GASKET REED
15	RCR60026	CARBURETOR 26mm MIKUNI
16	MCMUCL04	HOSE CLAMP 8mm
17	FCMU0026	FUEL LINE
18	ECC60014	REED PETALS - REPLACEMENT

Parts – Bars and Controls

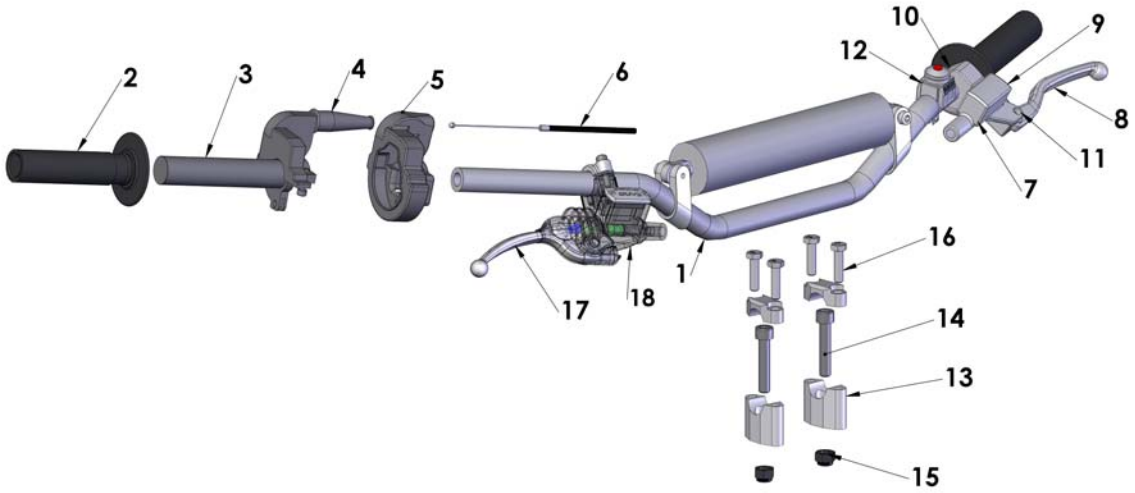

Bars and Controls		
REF #	PART #	DESCRIPTION
1	FAMU0011	HANDLEBAR – ALUMINUM
2	TCMU0008	GRIPS (SET OF TWO)
3	FCMU0066	THROTTLE ASSEMBLY
4	FCPW0004	CABLE COVER
5	FCMU0021	THROTTLE COVER
6	RAC60001	THROTTLE CABLE
7	CCMU0014	MASTER CYLINDER W/LEVER - CLUTCH
8	CCDC0001	CLUTCH LEVER
9	CCMU0004	COVER – RESERVOIR (REPLACEMENT)
10	BCC60014	CLAMP – PERCH (REPLACEMENT)
11	BCC60022	BUSHING CLUTCH LEVER PIVOT CX65
12	FCMU0033	KILL SWITCH ASSEMBLY
13	TKMU0404	BAR MOUNT KIT, SHORT (1 REQ'D) STANDARD
13A	TKMU0403	BAR MOUNT KIT, TALL (1 REQ'D)
14	HCBC1002	M10X50mm SOCKET HEAD CAP SCREW (2 REQ'D)
15	HCNL1001	M10 LOCK NUT
16	HCBH0820	M8 X 20 HEX HEAD BOLT (4 REQ'D)
17	BCC60057	BRAKE LEVER
18	BAC60008	BRAKE ASSY COMPLETE – FRONT CX65 ZL150
ACCESSORY	BKC60004	BRAKE - MASTER CYLINDER - REBUILD KIT - ZL150
ACCESSORY	CCC60010	LINE - CLUTCH (REPLACEMENT)
ACCESSORY	CCMU0135	CLUTCH - MASTER CYLINDER - REBUILD KIT

Parts - Carburetor

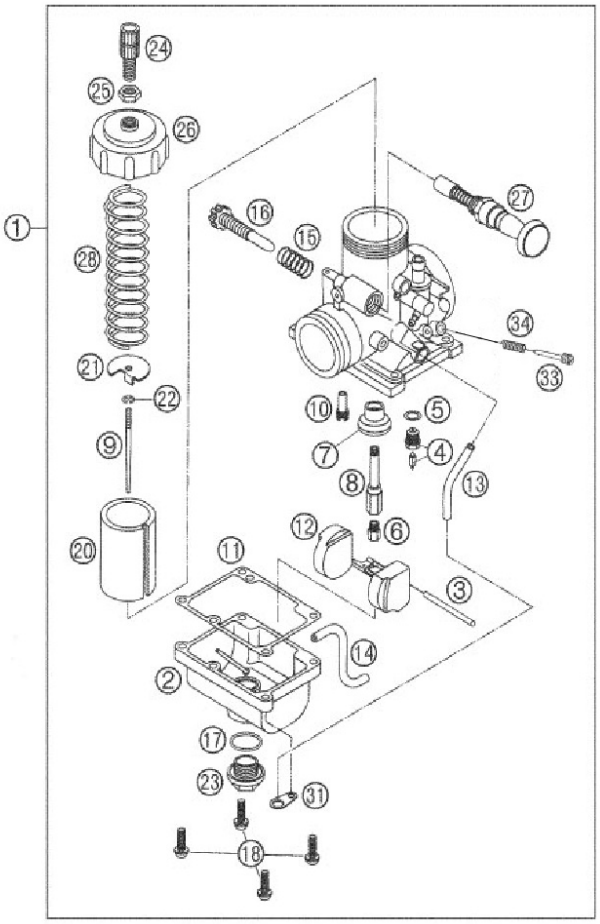

Carburetor		
REF. #	**PART #**	**DESCRIPTION**
1	RCR60026	CARBURETOR 26MM MIKUNI
2	RCC60017	FLOAT BOWL CHAMBER
3		
4	RCMU0271	NEEDLE VALVE & SEAT ASSY
5		
6	SEE BELOW	MAIN JET
7		
9	RCEX0026	NEEDLE JET STOCK 5L14
10	SEE BELOW	PILOT JET
11	RCC60013	GASKET, FLOAT BOWL
12		
13		
15	RCEX0016	SPRING IDLE ADJUST SCREW
16	RCEX0015	IDLE ADJUST SCREW
17	ZCDCOR01	O'RING BOWL PLUG
18	RCEX0012	FLOAT BOWL SCREW
20		
21	RCC60016	SLIDE MASS
22	RCMU0277	CLIP - NEEDLE
23		
24	RCEX0005	ADJUSTER
	RCMU0415	CABLE ADJUSTER CAP (RUBBER)
25	RCEX0006	LOCK NUT
26		
27		
31		
33		
34	RCEX0014	SPRING – AIR ADJUST SCREW

PILOT JET		MAIN JET	
30	RCEX0030	190	RCMU0190
32.5	RCEX0032	195	RCMU0195
35	RCEX0035	200	RCMU0200
37.5	RCEX0037	205	RCMU0205
40	RCEX0040	210	RCMU0210
42.5	RCEX0042	215	RCMU0215
		220	RCMU0220
		225	RCMU0225
		230	RCMU0230
		235	RCMU0235
		240	RCMU0240
		250	RCMU1250
		260	RCMU1260
		270	RCMU1270
		280	RCMU1280
		290	RCMU1290
		300	RCMU1300
		310	RCMU1310

Parts – Coolant System

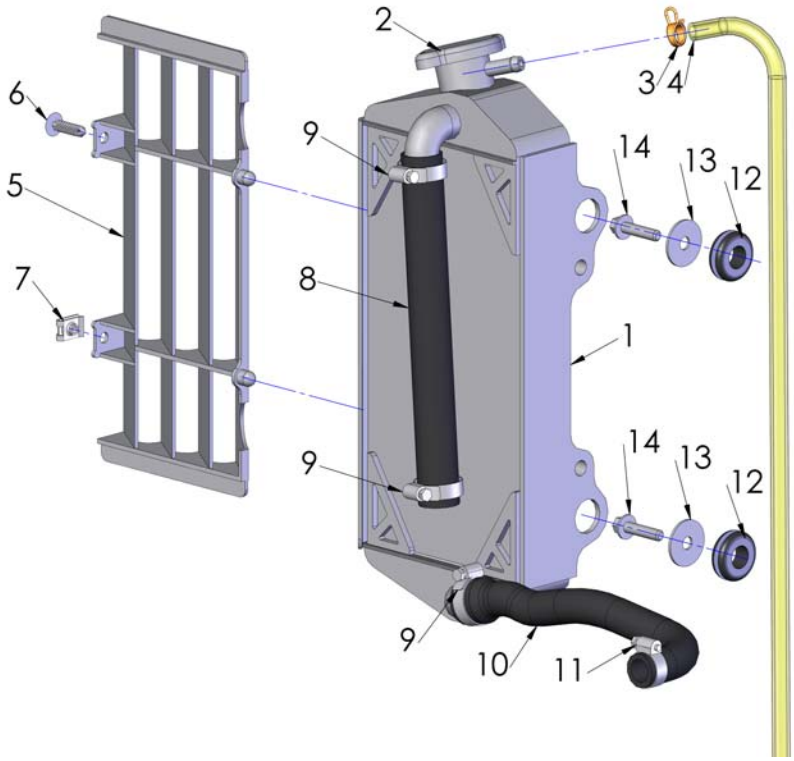

Coolant System		
REF #	PART #	DESCRIPTION
1	FCC60060	RADIATOR W/CAP - CX65
2	FCMU0022	CAP – 1.3 BAR
3	MCMUCL05	HOSE CLAMP 11-20 UNIVERSAL
4	FCKG0214	HOSE - OVERFLOW
5	FCDC0009	RADIATOR LOUVER-CX65
6	HCSP0002	PUSH PIN - PLASTIC
7	HCCN0000	5mm EXTRUDED "U" NUT
8	ECCS0014	HOSE RADIATOR UPPER
9	MCMUCL07	HOSE CLAMP RADIATOR MEDIUM (3 REQ'D)
10	ECC60012	HOSE RADIATOR BOTTOM
11	MCMUCL09	HOSE CLAMP RADIATOR SMALL (1 REQ'D)
12	MCC6GR01	GROMMET RADIATOR (2 REQ'D)
13	HCWF1478	6mm WASHER 22mm OD BLK ZINC (2 REQ'D)
14	HCBF0616	M6X16mm FLANGED HEX-8mm HEAD (2 REQ'D)

Parts – Electrical System

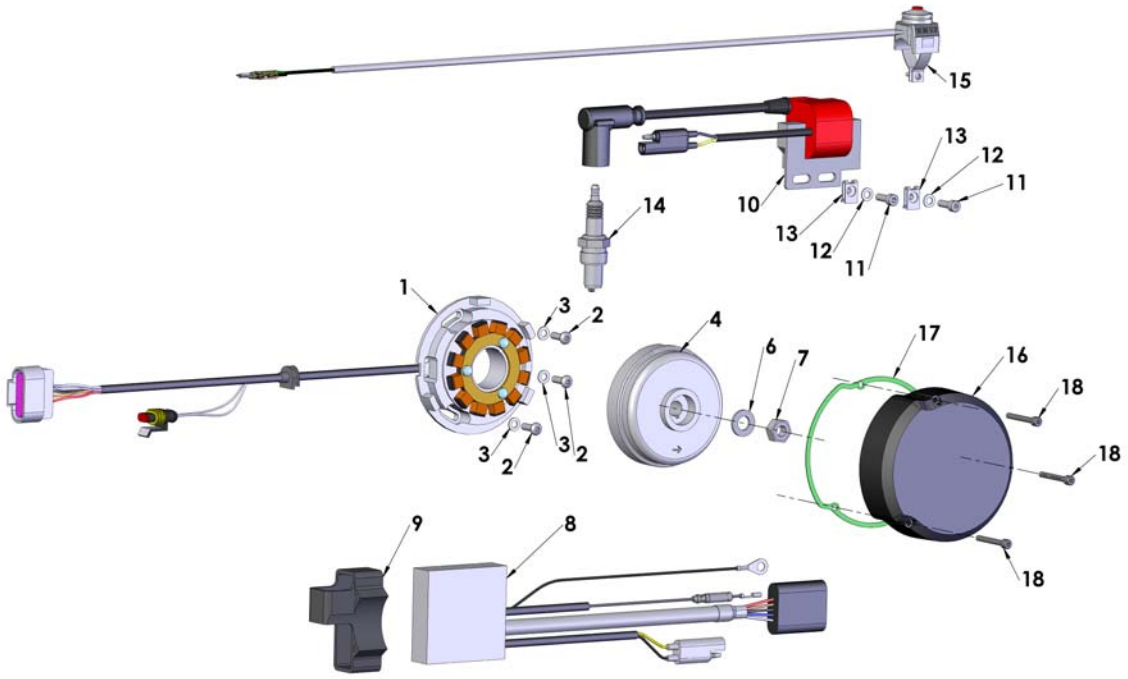

Electrical System		
REF #	PART #	DESCRIPTION
1	ICC60014	STATOR – POWER VALVE CX65
2	HCBB0516	M5X16mm BUTTON HEAD SCREW (3 REQ'D)
3	HCWF0501	5mm FLAT WASHER (3 REQ'D)
4	ICC60003	ROTOR OUTER STYLE CX65
5	ICMU0012	WOODRUFF KEY (NOT SHOWN)
6	HCWF0010	10mm FLAT WASHER
7	HCNS1001	M10 NUT
8	ICC60016	CDI UNIT – POWER VALVE CX65
9	ICMU0035	MOUNT - CDI
10	ICC60005	COIL DIGITAL 65
11	HCBC0516	M5X16mm SOCKET HEAD CAP SCREW – COIL MOUNTING (2 REQ'D)
12	HCWF0501	5mm WASHER – COIL MOUNTING (2 REQ'D)
13	HCCN0000	5mm EXTRUDED "U" NUT – COIL MOUNTING (2 REQ'D)
14	ECMU0033I	SPARK PLUG (AUTOLITE XS 6063)
15	FCMU0033	KILL SWITCH ASSEMBLY
16	ECDC0085	COVER - IGNITION
17	ZCDC0004	GASKET-IGNITION COVER
18	HCBC0402	M4X35mm SOCKET HEAD CAP SCREW – COVER MOUNTING (3 REQ'D)
ACCESSORY	ICMU0016	SPARK PLUG CAP 5K Ω
ACCESSORY	MCKGGR00	GROMMET WIRE PROTECTION (2 PLACES)

Parts – Engine Clutch

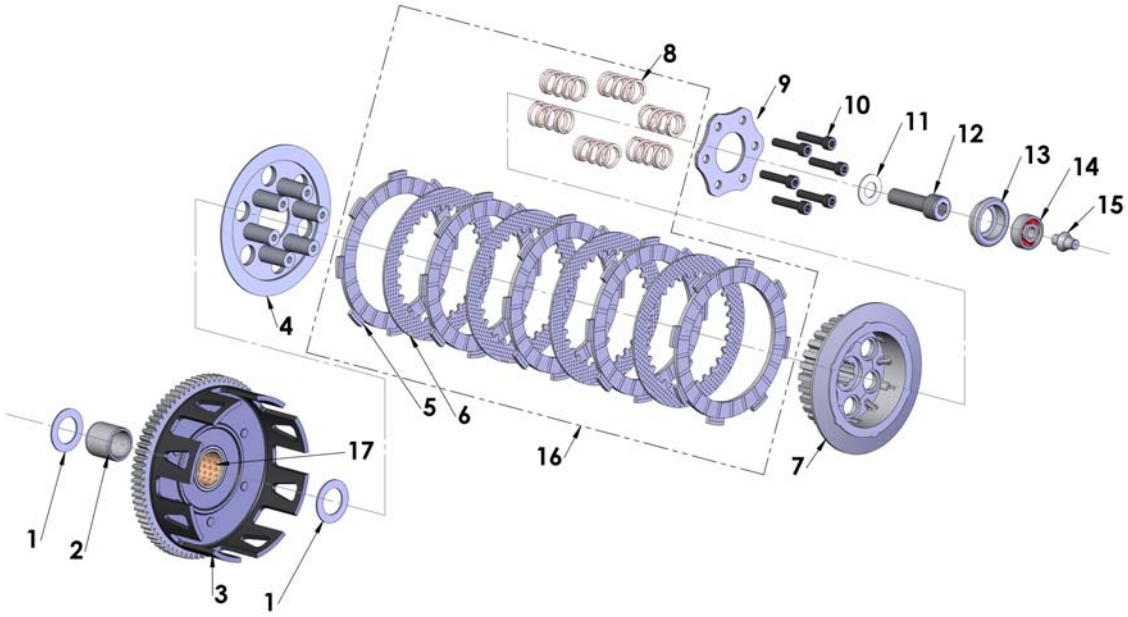

Clutch Components		
REF. #	PART #	DESCRIPTION
1	ECDC0063	CLUTCH WASHER (2 REQ'D)
2	ECDC0064	CLUTCH BUSHING – INNER / STEEL
3	EAEX0003	CLUTCH BASKET ASSEMBLY (INCLUDES ECDC0167)
4	ECDC0066	CLUTCH PRESSURE PLATE
5	ECDC0068	CLUTCH DISC-FRICTION – (5 REQ'D)
6	ECDC0067	CLUTCH DISC-STEEL – (4 REQ'D)
7	ECDC0069	CLUTCH HUB
8	ECDC0070	SPRING, CLUTCH – (6 REQ'D)
9	ECDC0071	PLATE, CLUTCH SPRING
10	HCBC0525	M5X25mm SOCKET HEAD CAP SCREW (6 REQ'D)
11	ECDC0030	SPRING WASHER – CLUTCH
12	HCBF1035	M10X35mm FLANGE HEAD BOLT
13	ECDC0019	CLUTCH BEARING SEAT
14	ECDC0018	BEARING, CLUTCH THROW OUT
15	ECC60050	CLUTCH PUSH ROD
16	**CKMU0001**	**CLUTCH KIT INCLUDING- SPRINGS, STEELS AND FIBERS**
17	ECDC0167	CLUTCH BUSHING - OUTER / BRONZE (REPLACEMENT)

Parts – Engine – Clutch / Kick Cover

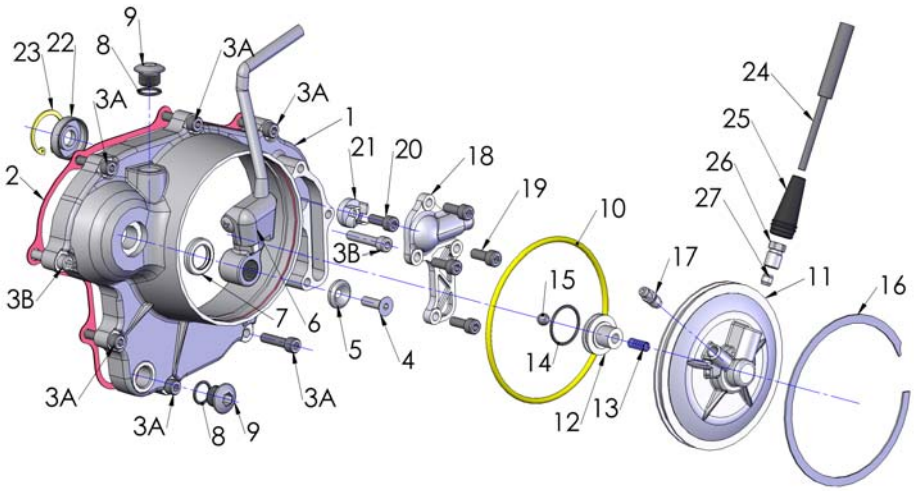

Clutch / Kick Cover Components		
REF. #	PART #	DESCRIPTION
1	ECMU0235	CLUTCH COVER
2	ZCC60007	GASKET-CLUTCHCOVER
3A	HCBC0625	M6X25mm SOCKET HEAD CAP SCREW (6 REQ'D)
3B	HCBC0630	M6X30mm SOCKET HEAD CAP SCREW (2 REQ'D)
4	HCFH0616	M6X16mm FLAT HEAD BOLT
5	ECMU0250	WASHER – KICK LEVER
6	ECMU0130	KICKSTARTER LEVER – ALUMINUM
7	ECDC0078	SEAL, KICKSTARTER
8	ZCMUB014	O-RING-OIL FILL PLUG
9	ECMU0168 (B, BL, OR R)	OIL FILL PLUG, ALUMINUM (SUFFIX INDICATES COLOR, B – BLACK, BL – BLUE, R – RED)
10	ZCDCOR05	O-RING-CLUTCH CAP
11	ECC60053	CLUTCH CAP W/SLAVE CYLINDER
12	CCC60005	PISTON – CLUTCH SLAVE CYLINDER
13	CCC60006	SPRING – SLAVE RETURN
14	ZCMUOR35	O-RING – SLAVE PISTON
15	CCEX0009	BALL, CLUTCH ACTUATOR
16	ECDC0082	SNAP RING-CLUTCH CAP
17	BCMU0018	FITTING – BLEED, CLUTCH LINE
18	ECAX0150	IMPELLER COVER
19	HCBC0601	M6X16mm SOCKET HEAD CAP SCREW
20	HCBC1512	M5X12mm SOCKET HEAD CAP SCREW STAINLESS STEEL
21	ECDC0075	IMPELLER, WATERPUMP
22	ECKG0074	SEAL, WATERPUMP
23	ECMU0218	RETAINING RING, WATER PUMP SEAL
24	CCC60010	LINE – CLUTCH REPLACEMENT
25	BCMU0021	COVER – RUBBER CLUTCH LINE END
26	BCMU0020	FITTING – THREADED CLUTCH LINE END
27	BCMU0017	FERRULE – COMPRESSION FITTING
ACCESSORY	EKMU0002	PIVOT SPRING, BALL AND SET SCREW KIT – KICK STARTER

Parts – Engine – Ignition Side

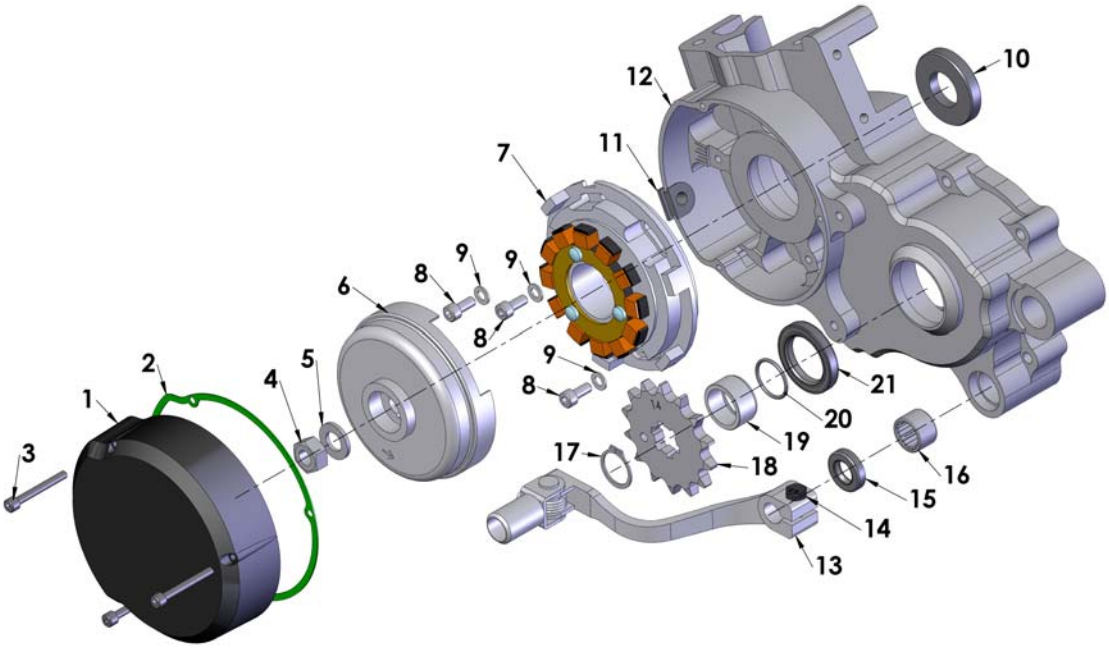

Ignition Side Engine Components		
REF. #	PART #	DESCRIPTION
1	ECDC0085	IGNITION COVER
2	ZCDC0004	GASKET-IGNITION COVER
3	HCBC0402	M4X35mm SOCKET HEAD CAP SCREW (3 REQ'D)
4	HCNS1001	M10 NUT
5	HCWF0010	10mm FLAT WASHER
6	ICC60003	ROTOR PVL OUTER STYLE
7	ICC60014	STATOR PVL DIGITAL – POWER VALVE CX65
8	HCBB0516	M5X16mm BUTTON HEAD (3 REQ'D)
9	HCWF0501	5mm WASHER FLAT (3 REQ'D)
10	ECDC0024	SEAL, CRANKSHAFT
11	ICMUGR01	GROMMET-IGNITION
12	EKC62012	ENGINE CASE SET W/B&S CX65
13	ECDC0086	SHIFTER LEVER – CX65
14	HCFH0620	M6X20mm HEX HEAD BOLT
15	ECDC0026	SEAL, SHIFTER
16	ECMU0020	BEARING, SHIFTER SHAFT
17	ECKGSR03	SNAP RING-OUTPUT-COBRA
18	PCKG00xx	xx DENOTES TEETH – RANGE OF TEETH (13-16)
19	ECDC0009	SPACER, SPROCKET
20	ZCDCOR01	O-RING, SPROCKET SPACER
21	ECDC0025	SEAL, OUTPUT

Parts – Engine – Kick Mechanism

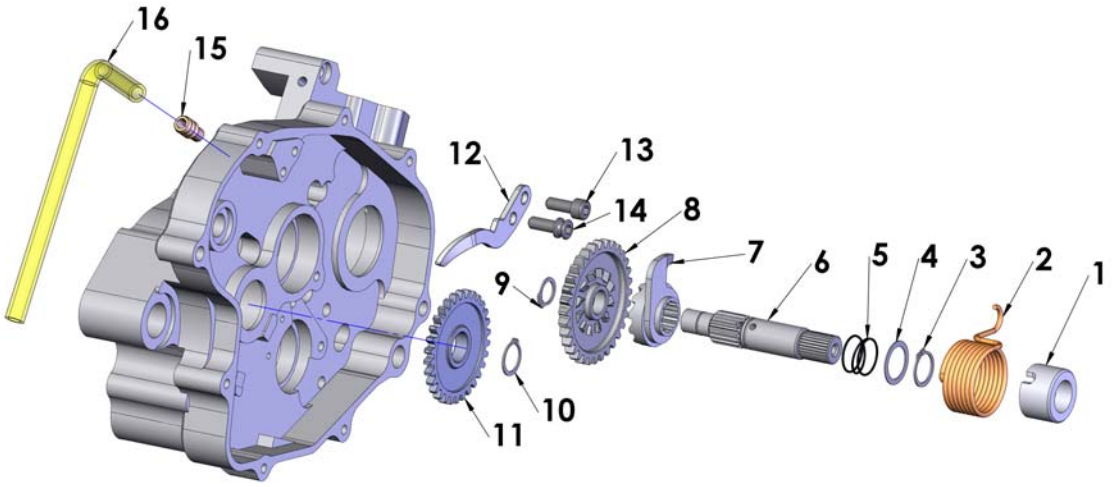

Kick Mechanism		
REF. #	PART #	DESCRIPTION
1	ECC60066	SPACER – KICK SPRING CENTERING
2	ECC60067	SPRING KICK START CX65
3	ECDC0036	SNAP RING, EXTERNAL 16mm - SPRING RET.
4	ECDC0043	WASHER, KICKSTART BACKUP
5	ECDC0042	SPRING, KICKSTART RAMP
6	ECMU0171	SHAFT, KICK STARTER – THREADED
7	ECDC0145	RAMP GEAR, KICKSTART
8	ECDC0033	GEAR, KICKSTART
9	ECDC0035	SNAP RING, EXTERNAL 12mm
10	ECDC0037	SNAP RING, EXTERNAL 15mm
11	ECDC0032	GEAR, KICK START IDLE
12	ECDC0144	RAMP, KICK START
13	HCBC0601	M6X16mm SCOCKET HEAD CAP SCREW
14	ECMU0170	SPRING HOLDER
15	ECMU0233	FITTING, VENT HOSE
16	ECMU0534	VENT HOSE

Parts – Engine – Shift Mechanism

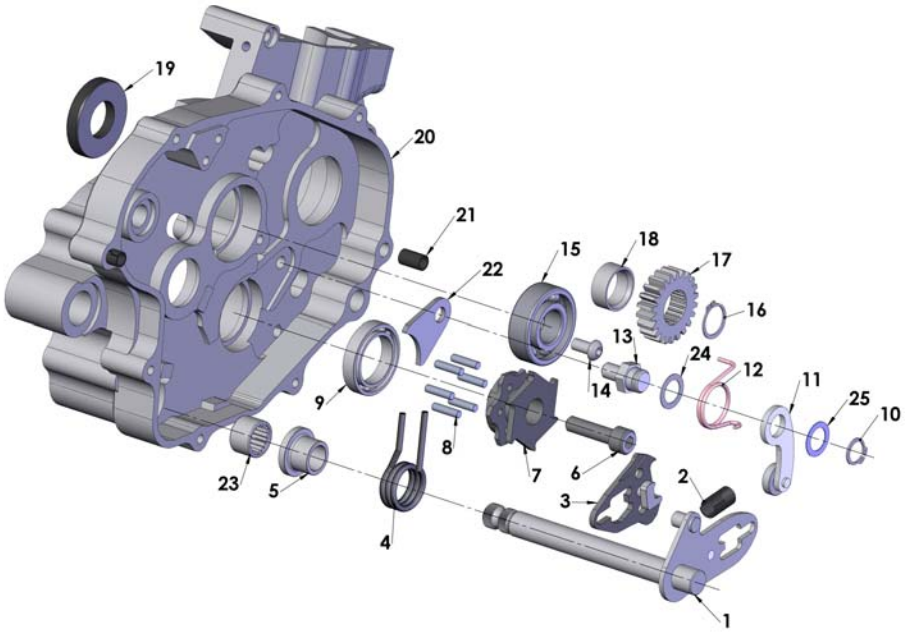

Clutch Components		
REF #	PART #	DESCRIPTION
1	EAC60011	SHIFTER SHAFT W/ PIVOT PLATE
2	ECDC0055	SPRING – SHIFTER PLATES
3	EAC60012	SHIFTER SLIDE PLATE
4	ECDC0061	SPRING, SHIFTER SHAFT CENTERING
5	ECC60146	SPACER BUSHING
6	HCBC0825	M8X25mm SOCKET HEAD CAP SCREW
7	ECC60130	SHIFT CASSETTE (W/O PINS)
8	ECDC0051	DOWEL – SHIFT CASSETTE (6 REQ'D)
9	ECDC0022	BEARING, SHIFT DRUM
10	ECDC0035	CLIP, ARM RETAINER
11	ECMU0545	ARM ASSY, SHIFT FOLLOWER
12	ECMU0546	SPRING, SHIFT FOLLOWER ARM
13	ECC60096	PIVOT, SHIFT ARM
14	HCBB1612	M6X12mm BUTTON HEAD BLACK OXIDE
15	ECMU0016	BEARING, PRIMARY SHAFT CLUTCH SIDE
16	ECDC0036	SNAP RING, EXTERNAL 16mm
17	ECDC0073	CRANK DRIVE GEAR
18	ECDC0112	SPACER, CRANK DRIVE GEAR
19	ECDC0024	SEAL, CRANKSHAFT
20	EKC62012	ENGINE CASE SET W/B&S CX65
21	ECDC0031	DOWEL, HOLLOW (2 REQ'D)
22	ECC60095	BEARING RETAINER PLATE
23	ECMU0020	BEARING (SOME ENGINES HAVE THIS VS. #5 BUSHING)
24	ECC60119	SHIM WASHER
		NOTE MEASURE SHIM TO ORDER CORRECT SIZE
25	ECC60152	SHIM 0.2mm THICK
25	ECC60153	SHIM 0.3mm THICK

Parts – Engine – Top End

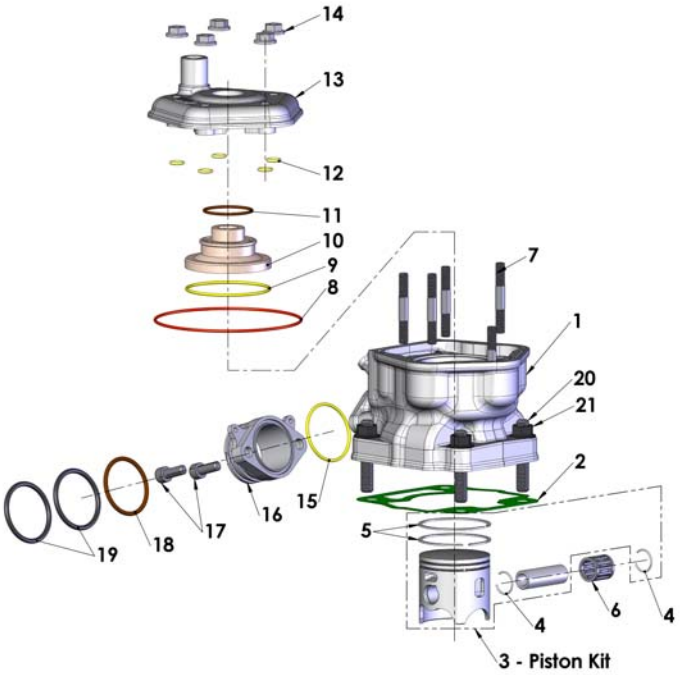

Engine – Top End		
REF #	PART #	DESCRIPTION
1	ECC60132	CYLINDER KIT PV CX65 (INCLUDES PISTON KIT & CYLINDER)
2	ZCC60202	BASE GASKET 0.2mm THICK
2	ZCC60203	BASE GASKET 0.3mm THICK
2	ZCC60204	BASE GASKET 0.4mm THICK
2	ZCC60205	BASE GASKET 0.5mm THICK
2	ZCC60206	BASE GASKET 0.6mm THICK
2	ZCC60208	BASE GASKET 0.8mm THICK
3	ECMU0184AB	PISTON KIT (AB PISTON SIZE)
3	ECMU0184CD	PISTON KIT (CD PISTON SIZE)
4	ECMUSR00	SNAP RING FOR PISTON (2 REQ'D)
5	ECEX0005	PISTON RINGS 44.5mm (2 PER SET)
6	ECDC0061	BEARING, WRIST PIN
7	ECC60107	STUD, CYLINDER 6mm (5 REQ'D)
8	ZCC60009	O-RING - GASKET LARGE PV HEAD OUTER
9	ZCMUOR05	O-RING CYLINDER HEAD MEDIUM - YELLOW
10	ECC60097	CYLINDER HEAD INSERT PV
11	ZCMUV024	O-RING CYLINDER HEAD SMALL
12	ZCMUOR03	O-RING CYLINDER STUD - YELLOW (5 REQ'D)
13	ECC60088	CYLINDER HEAD OUTER
14	HCNF0601	M6 FLANGE NUT (5 REQ'D)
15	ZCMUOR07	O-RING, EXHAUST FLANGE TO CYLINDER
16	ECC60002	EXHAUST FLANGE
17	HCBC0601	M6X16mm SOCKET HEAD CAP SCREW (2 REQ'D)
18	ZCMOTE11	O-RINGS – PIPE TO FLANGE (1 REQ'D)
19	ZCMUOR20	O-RINGS – PIPE TO FLANGE (2 REQ'D)
20	ECC60109	STUD, CYLINDER 8mm (4 REQ'D)
21	HCNF0801	M8 FLANGE NUT (4 REQ'D)
NOT SHOWN	ZKMUOR12	O-RING KIT – TOP END – CX65 PV

Parts – Engine – Power Valve

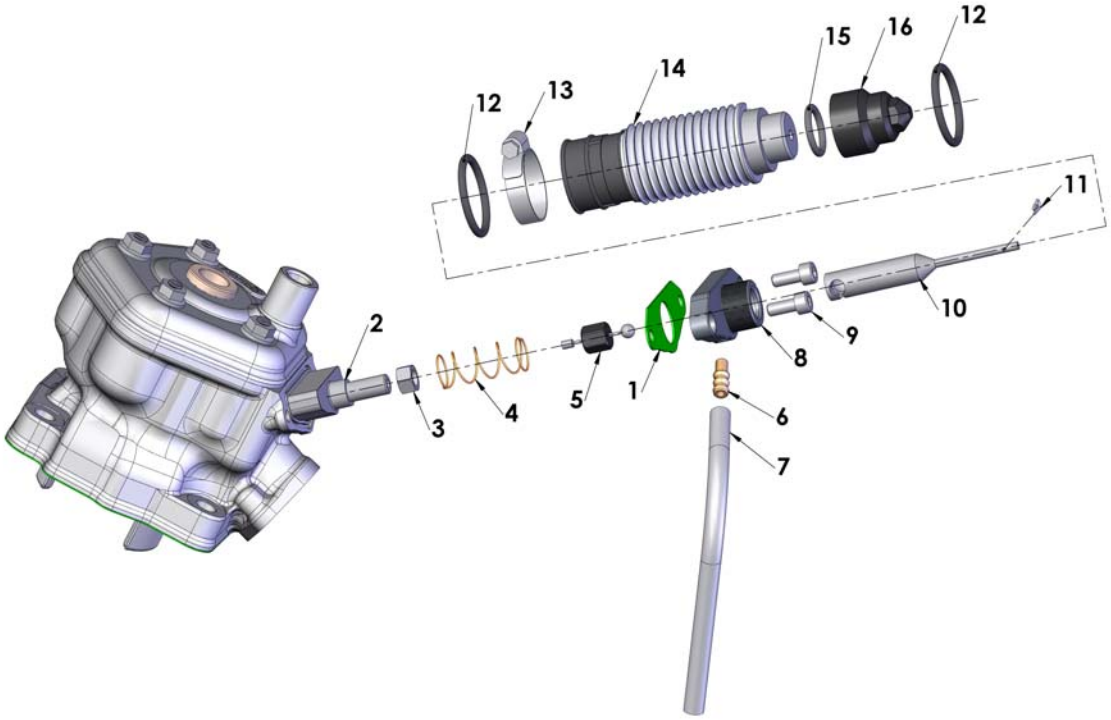

Engine – Top End		
REF #	PART #	DESCRIPTION
1	ZCC60012	GASKET POWER VALVE CAP 2012 CX65
2	ECC60078	POWER VALVE SLIDE
3	HCNJ0802	JAM NUT
4	ECC60079	SPRING PV RETURN
5	ECC60093	CABLE - EXHAUST VALVE ACTUATION PV
6	ECMU0533	VENT HOSE NIPPLE
7	ECC60133	HOSE POWER VALVE VENT
8	ECC60089	CAP - POWER VALVE
9	HCBC0501	M5X12mm SOCKET HEAD CAP SCREW
10	ECC60101	PLUNGER - POWER VALVE SOLENOID
11	ECC60103	CLIP - POWER VALVE PLUNGER RETAINER
12	ZCMUOR18	O-RING SOLENOID MOUNT (2 REQ'D)
13	MCMUCL02	HOSE CLAMP 17 - 32 UNIVERSAL
14	ECC60100	SOLENOID ASSEMBLY POWER VALVE
15	ZCMU0114	O-RING - SOLENOID CAP
16	ECC60108	CAP PLUNGER COVER POWER VALVE

Parts – Engine – Transmission

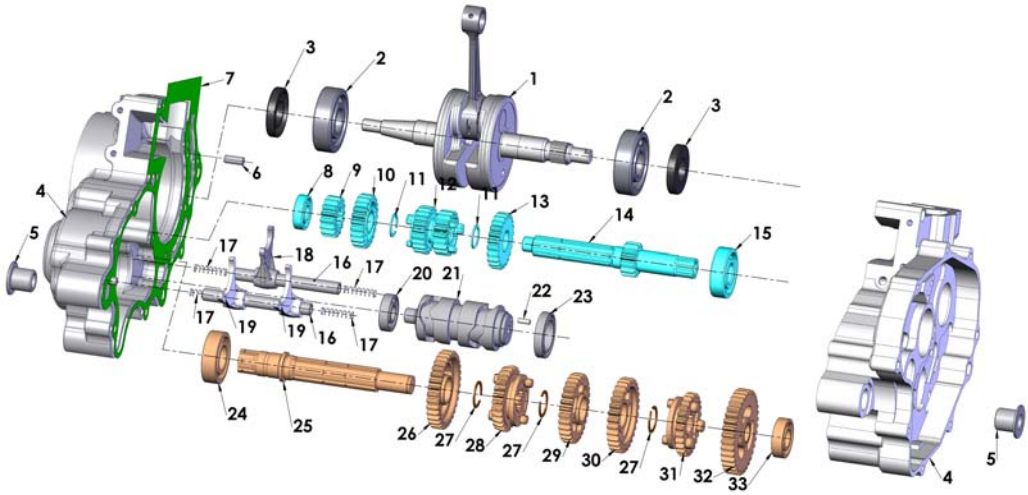

Transmission		
REF #	PART #	DESCRIPTION
1	ECC60027	CRANKSHAFT CX65
2	ECDC0023	BEARING, CRANKSHAFT
3	ECDC0024	SEAL, CRANKSHAFT
ACCESSORY	EKEX0001	ROD KIT
4	EKC62012	ENGINE CASE SET W/B&S CX65
5	ECC60028	BUSHING ENGINE / SWINGARM PIVOT CX65
6	HCDP1401	DOWEL, SOLID CENTERING (2 REQ'D)
Left Case Screws	HCBC0604	M6X35mm SOCKET HEAD CAP SCREW (4 REQ'D)
Right Case Screws	HCBC0603	M6X30mm SOCKET HEAD CAP SCREW (7 REQ'D)
Right Case Screws	HCBC0607	M6X50mm SOCKET HEAD CAP SCREW (1 REQ'D)
7	ZCC60008	GASKET CRANKCASE CX65
8	ECKG0031	BEARING, PRIMARY SHAFT IGNITION SIDE
9	ECDC0006	GEAR, 2ND PRIMARY, 16T
10	ECDC0005	GEAR, 5TH PRIMARY, 23T
11	ECDC0003	SNAP RING, EXTERNAL 17mm (2 REQ'D)
12	ECDC0004	GEAR, 3RD/ 4TH PRIMARY, 18/21T
13	ECDC0002	GEAR, 6TH PRIMARY 24T
14	ECDC0001	SHAFT, TRANSMISSION PRIMARY (1ST GEAR), 13T
15	ECMU0016	BEARING, PRIMARY SHAFT CLUTCH SIDE
16	ECDC0070	SHIFT ROD (2 REQ'D)
17	ECC60071	SPRING SHIFT ROD (4 REQ'D)
18	ECDC0048	SHIFT FORK, INPUT
19	ECDC0049	SHIFT FORK, OUTPUT (2 REQ'D)
NOT SHOWN	ECC60055	ROLLER – SHIFT FORK PIN (3 REQ'D)
20	ECC60084	BEARING SHIFT DRUM (IGN SIDE)
21	EAC60010S	SHIFT DRUM STEEL (2 PIECE ASSEMBLY)
22	ECMU0541	CHANGE DRUM DOWEL STEP PIN
23	ECDC0022	BEARING, SHIFT DRUM
24	ECKGBR01	BEARING, OUTPUT IGNITION SIDE
25	ECDC0007	SHAFT, TRANSMISSION OUTPUT
26	ECDC0014	GEAR, 2ND OUTPUT, 31T
27	ECDC0017	SHAP RING, EXTERNAL 18mm (3 REQ'D)
28	ECDC0013	GEAR, 5TH, OUTPUT, 30T
29	ECDC0011	GEAR, 4TH OUTPUT, 28T
	ECMU0160 / 0161	SHIM .2 OR .5 THIK BETWEEN 3RD & 4TH
30	ECDC0010	GEAR, 3RD OUTPUT, 34T
31	ECDC0015	GEAR, 6TH OUTPUT, 26T
32	ECDC0016	GEAR, 1ST OUTPUT, 37T
33	ECDC0021	BEARING, OUTPUTSHAFT CLUTCH SIDE
ACCESSORY	ECMU0040 / 40T	SHIM TRANSMISSION 0.030" (0.8mm) THICK / 0.015" (0.4mm)

Parts – Exhaust System

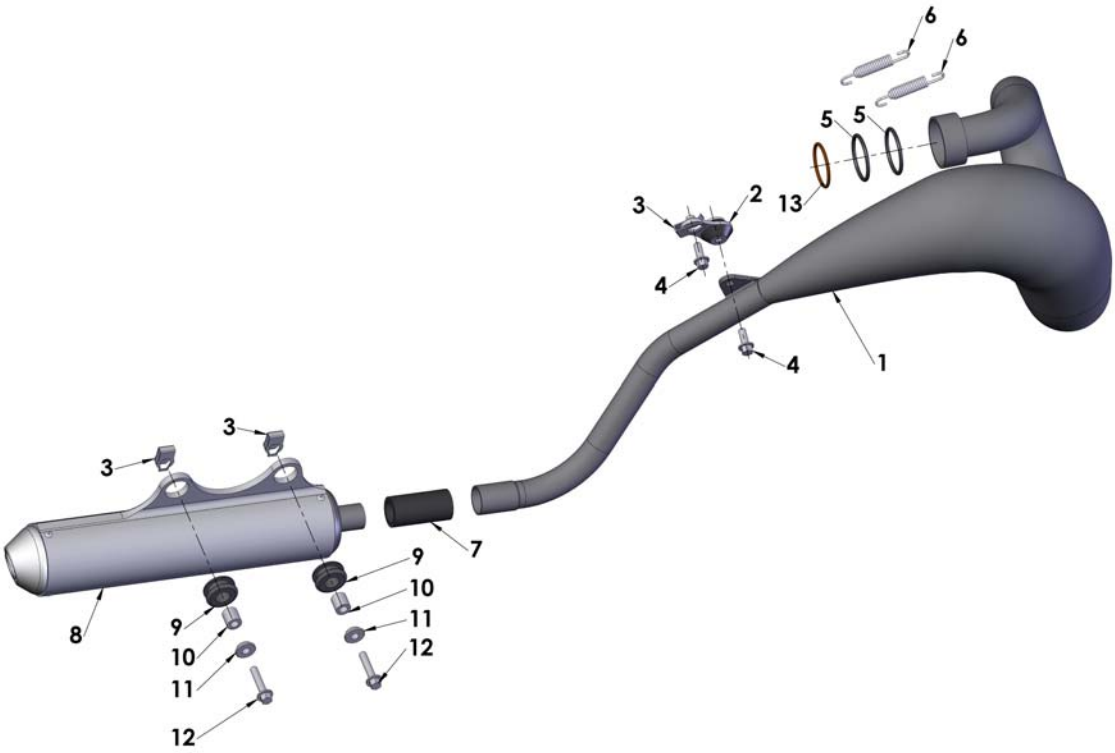

Exhaust System		
REF #	PART #	DESCRIPTION
1	XAC62012	EXPANSION CHAMBER CX65
2	XCMU0033	ISOLATION MOUNT
3	HCHA0003	6mm CLIP NUT-PLASTIC/PIPE MNT (1 REQ'D FOR PIPE & 2 REQ'D FOR SILENCER)
4	HCBF0616	M6X16mm FLANGE HEAD BOLT (2 REQ'D)
5	ZCMUOR20	O-RING – EXHAUST (2 REQ'D)
6	XCMU0005	SPRING – PIPE – SHORT
7	XCKG0009	GROMMET – SILENCER TO PIPE
8	XCMU0032	SILENCER 10" ROUND
9	MCMUGR03	GROMMET FOR RADIATOR (2 REQ'D)
10	TCKG0001	SPACER GENERAL ½DIA 13.2 LG (2 REQ'D)
11	TCC60016	SPACER TOP HAT (2 REQ'D)
12	HCBF0633	M6X35mm FLANGE HEX-8mm HEAD
13	ZCMOTE11	O-RING – EXHAUST (1 REQ'D)
ACCESSORY	XCMU0026	SILENCER PACKING KIT

Parts – Forks – Leg Assembly

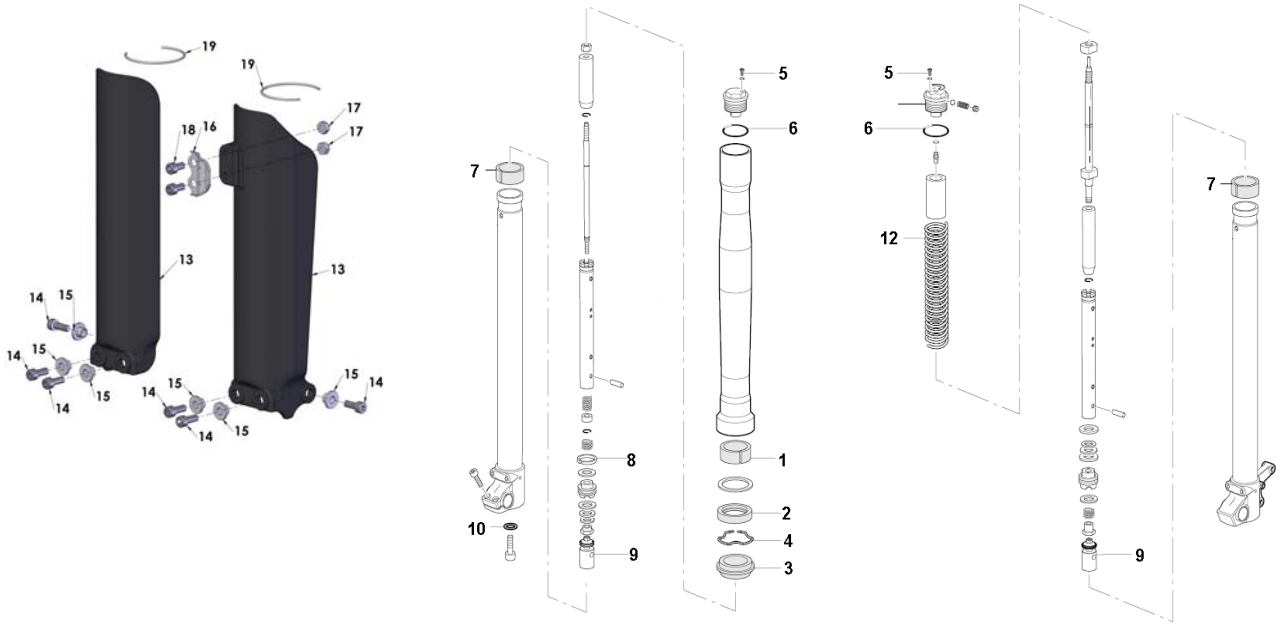

Fork Leg Assembly		
REF #	PART #	DESCRIPTION
	KACX6527	FORK SET – 2008 CX65
1	KCC60004	BUSHING – TOP
2,3	KKC60002	FORK SEAL, DUST COVER(SWIPER) KIT (1 EACH)
4	KCC60011	CLIP RING
5	KCC60012	BLEED SCREW WITH SEAL
6	ZCMUOR16	O-RING – FORK CAP
7	KCC60005	BUSHING – BOTTOM
8	KCC60006	SEAL – PISTON
9	KCC60009	BASE VALVE BODY
10	KCC60008	WASHER – FORK BOTTOM
11	KCC60007	CAP - COMPRESSION SIDE
12	KCC60026	FORK SPRING .26 KG/MM STANDARD
12	KCC60024	FORK SPRING .24 KG/MM LIGHT
12	KCC60028	FORK SPRING .28 KG/MM HEAVY
13	KCC60014	FORK GUARDS – PAIR (3 BOLT STYLE)
14	HCBC0601	M6X16mm SOCKET HEAD CAP SCREW (6 REQ'D)
15	TCC60019	SPACER – FORK GUARD MOUNTING (6 REQ'D)
16	BCC60015	CLAMP – BRAKE LINE
17	HCNS0601	M6 NUT (2 REQ'D)
18	HCBC0612	M6X12mm SOCKET HEAD CAP SCREW (2 REQ'D)
19	KCC60023	RING – FORK OUTER WEAR

Parts – Frame & Triple Clamps

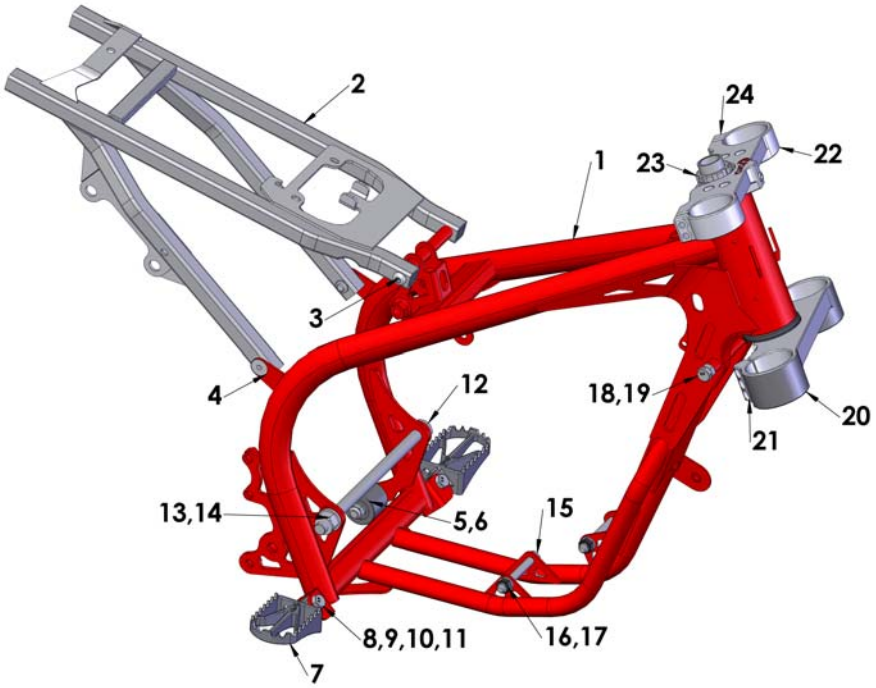

Frame		
REF #	PART #	DESCRIPTION
1	FACX0020	FRAME WELDED ASSEMBLY
2	FAC60016	SUBFRAME CX65
3	HCBB0835	8X35MM BUTTON HEAD SCREW (2 REQ'D) – TOP MOUNT
4	HCFH0825	8X25MM FLAT HEAD CAP SCREW – (2 REQ'D) – BOTTOM MOUNT
5	FCC60020	CHAIN ROLLER W BEAR & SEALS
6	BCDC0153	WASHER
7	TCMU0039	FOOTPEG SET ULTRA WIDE CX65
8	TCC60012	FOOTPEG SPRING ULTRA WIDE 07 (2 REQ'D)
9	HCBH0840	8MM X 40 HEX HEAD 30MM NO THRD – FOOTPEG (2 REQ'D)
10	HCWF0803	8MM FLAT WASHER
11	HCNL0802	8MM LOCKNUT – FOOTPEG (2 REQ'D)
12	WCKG0011	SWINGARM PIVOT BOLT
13	HCWF1202	12MM FLAT WASHER
14	HCNL1201	12MM LOCKNUT
15	HCBH0865	8X65MM HEX HEAD – FRONT ENGINE MOUNTS (2 REQ'D)
16	HCWF0801	8MM FLAT WASHER – FRONT ENGINE MOUNTS (4 REQ'D)
17	HCNL0801	8MM LOCKNUT – FRONT ENGINE MOUNTS (2 REQ'D)
18	HCBH0807	8X20MM HEX HEAD – STEERING STOP (2 REQ'D)
19	HCNS0801	8MM NUT – STEERING STOP (2 REQ'D)
20	FAC60021	TRIPLE CLAMP BOTTOM W/STEM, BEARING & DUST COVER
21	HCBC0625	6X25MM FOR BOTTOM CLAMP (6 REQ'D)
22	HCNJ0102	JAM NUT STEERING STEM (2 REQ'D)
23	FCC60053	TRIPLE CLAMP TOP
24	HCBC0603	6X30MM SHCS FOR TOP CLAMP (4 REQ'D)

Parts – Head Tube

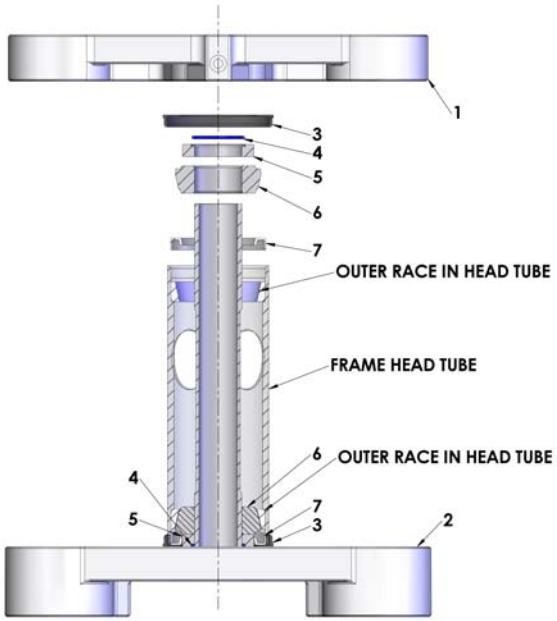

Frame		
REF #	PART #	DESCRIPTION
1	FCC60053	TRIPLE CLAMP TOP
2	FAC60021	TRIPLE CLAMP BOTTOM W/STEM
3	FCMU1103	DUST COVER STEER STEM, RUBBER (2 REQ'D)
4	SCMU0036	O-RING (2 REQ'D)
5	FCMU0023	SPACER (2 REQ'D)
6	FCMU0004	BEARING – STEERING TAPERED
7	FCMU0024	SEAL (2 REQ'D)

Parts – Front Wheel

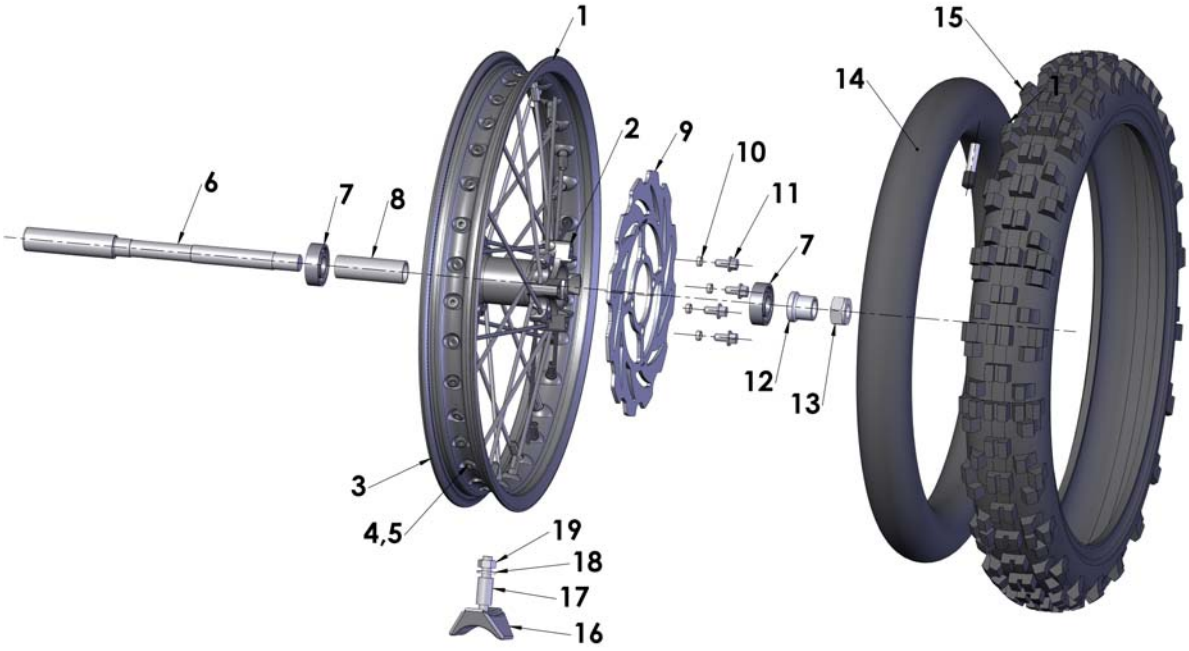

Front Wheel		
REF#	PART #	DESCRIPTION
1	WAC6FR01B	WHEEL 14” FRONT WITH BEARINGS (NO TIRE, OR TUBE,), BLACK
2	WCDCHB01	HUB FOR CX65 – FRONT
3	WCMU1400B	14” RIM, BLACK
4	WCDC0002	SPOKE-FRONT WHEEL-65 (32 REQ’D)
5	WCDC0011	NIPPLE-SPOKE 9GA. STAINLESS (32 REQ’D)
6	WCC60008	AXLE FRONT STEEL
7	WCMU0120	BEARING, WHEEL-SEALED (2 REQ’D)
8	WCC60006	SPACER WHEEL BEARING FRONT
9	BCC60040	BRAKE ROTOR FRONT – FLOATER – 206mm
10	ECC60055	SPACER – FLOATING ROTOR (4 REQ’D)
11	HCBF1612	M6X12mm FLANGE HEAD – LOW PROFILE (4 REQ’D)
12	WCC60002	WHEEL SPACER FRONT LEFT
13	HCNL1402	NUT, FRONT AXLE
14	WCDCTU14	TUBE – 60/100-14 FRONT
15	WCC6F014D	TIRE-DUNLOP 60/100-14 MX51
16	WCDC0001	RIM LOCK - 1.4/1.6
17	WCDC0008	RIM LOCK SPACER
18	HCWF0801	8mm FLAT WASHER
19	HCNS0801	M8 NUT

Parts – Front Brakes – Master Cylinder

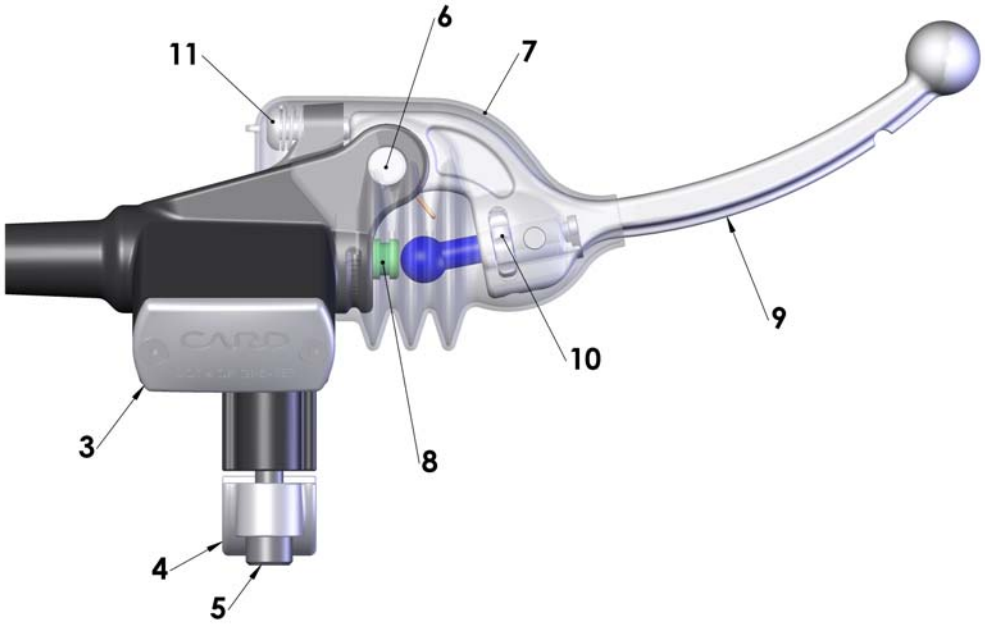

Front Brakes		
REF#	PART #	DESCRIPTION
1	BAC60008	BRAKE ASSY COMPLETE - FRONT CX65 ZL150 (M/C-LINE-CALIPER)
2	BAC60010	MASTER CYLINDER (M/C) ASSEMBLY CX65 ZL150
3	BKC60008	CAP & BLADDER KIT ZL150
		BRAKE M/C CAP ZL150
		BRAKE M/C CAP BLADDER ZL150
		M3-0.5 X 6mm LONG PHILLIPS SCREW (2)
4	BCC60058	CLAMP ZL150
5	HCBC0601	M6-1.0 X 25mm LONG SOCKET HEAD CAP SCREW
6	BKC60007	KIT - PIVOT BOLT ZL150
		BRAKE M/C PIVOT BOLT ZL150
		BRAKE M/C PIVOT BOLT CLIP ZL150
7	BCC60055	BOOT - MASTER CYLINDER L150
8	BKC60004	KIT - RE MASTER CYLINDER REBUILD L150
		BRAKE M/C PISTON ZL150
		BRAKE M/C FRONT SEAL PISTON ZL150
		BRAKE M/C REAR SEAL PISTON ZL150
		BRAKE M/C PISTON SPRING ZL150
		BRAKE M/C PISTON CLIP ZL150
		BRAKE M/C SPACER ZL150
9	BCC60057	LEVER - ZL150
10	BKC60005	KIT - LEVER ADJUSTMENT ZL150
		BRAKE M/C BALL DETENT SPRING ZL150
		BRAKE M/C DETENT BALL ZL150
		BRAKE M/C ADJUSTMENT DIAL ZL150
		BRAKE M/C SET SCREW ZL150
		BRAKE M/C BALL PIVOT ZL150
11	BKC60006	KIT - LEVER STOP BOLT & SPRING ZL150
		M6-1.0 X 15mm LONG BOLT
		BRAKE – ADJUSTMENT SCREW SPRING
12	BCC60054	LINE FRONT CX65 ZL150

Parts – Front Brakes – Caliper

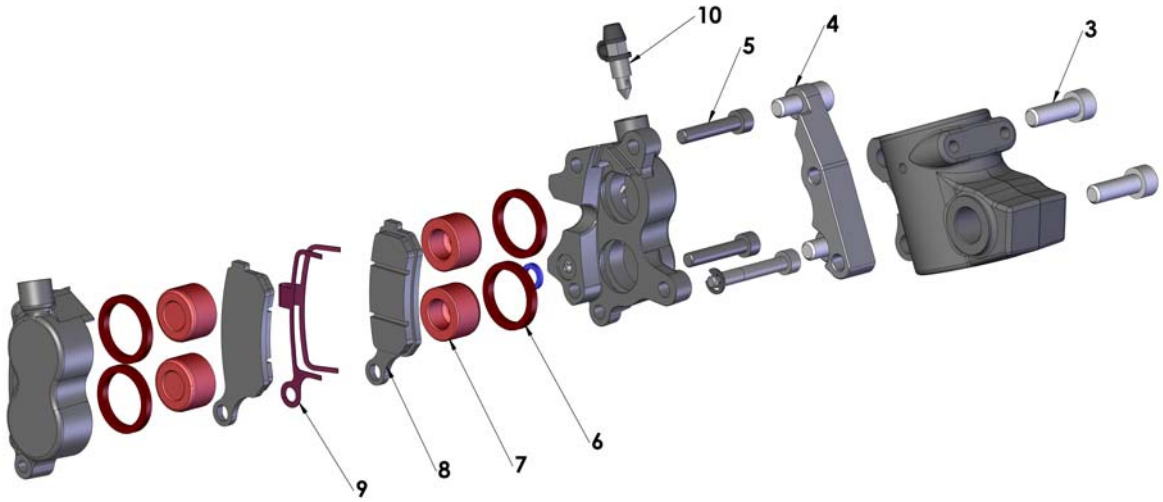

Front Brakes		
REF#	PART #	DESCRIPTION
1	BAC60008	BRAKE ASSY COMPLETE - FRONT CX65 (M/C-LINE-CALIPER) ZL150
2	BAC60009	BRAKE FRONT CALIPER ASSEMBLY CX65 ZL150
3	HCBC0820	M8X20mm LONG (4 REQ'D)
4	BCC60047	BRACKET - BRAKE FRONT ZL150
5	BKC60003	BRAKE CALIPER FASTENER KIT ZL150
		BRAKE PAD PIN ZL150
		BRAKE PAD PIN CLIP ZL150
		M6X32mm LONG ZL150
6	BKC60002	BRAKE - CALIPER SEAL KIT ZL150
		CALIPER CENTER SEAL ZL150
		SEAL BRAKE PISTON ZL150 (EACH)
7	BCC60068	BRAKE CALIPER PISTON ZL150 (4 REQUIRED)
8	BCC60050	BRAKE PAD SET ZL150
9	BCC60051	BRAKE PAD SPRING ZL150
10	BCC60033	BLEED SCREW & CAP KIT
11	BCC60054	BRAKE LINE FRONT CX65 ZL150 (NOT SHOWN)

Parts – Bodywork

Plastic and Seat		
REF #	PART #	DESCRIPTION
1	TCC60020	FRONT FENDER – YELLOW - STANDARD
1	TCC60020BLK	FRONT FENDER – BLACK
1	TCC60020WHT	FRONT FENDER – WHITE
1A	HCBF0616	FENDER BOLT, M6X16 FLANGE HEAD (4 REQ'D)
1B	TCC60021	SPACER – FRONT FENDER BOLT (4 REQ'D)
2	TCC60002W	NUMBER PLATE FRONT - WHITE - STANDARD
2	TCC60002B	NUMBER PLATE FRONT - BLACK
2	TCC60002	NUMBER PLATE FRONT - YELLOW
2A	HCBF0616	M6X16mm FLANGE HEAD BOLT – FRONT NUMBER PLATE MOUNT
3	TCC60023	SHROUD RIGHT – YELLOW
3A	TCC60017	BODY PANEL WASHER 5mm (2 REQ'D) – MT SHROUD TO TANK
3B	HCBC0516	M5X16mm SHCS (2 REQ'D) – MT SHROUD TO TANK
4	TCC60022	SHROUD LEFT – YELLOW
4A	TCC60017	BODY PANEL WASHER 5mm (1 REQ'D) – MT SHROUD TO TANK
4B	HCBC0516	M5X16mm SHCS (1 REQ'D) – MOUNT SHROUD TO RADIATOR
4C	HCCN0000	5mm EXTRUDED "U" NUT
5	TCC60024	FUEL TANK (NO PETCOCK OR CAP)
5A	HCBC0503	M5X30mm SHCS – FRONT TANK MOUNTING
5B	TCC60027	SPACER – FRONT TANK MOUNTING
5C	TCC60029	SPACER – SEAT MOUNT
5D	HCFH0620	M6X20mm FLAT HEAD – FRONT SEAT MOUNT
5E	TCMU0151	PETCOCK
6	TCHA0002	CAP – FUEL TANK
6A	TCHA0003	HOSE – FUEL CAP
6B	FCMU0151	CAP – STEERING STEM
7	TAC60002	SEAT – CX65
7A	HCBC0625	M6X25mm SOCKET HEAD CAP SCREW – SEAT HOLDING
7B	TCC60018	SPECIAL WASHER – SEAT HOLDING
8	TCC60005WHT	SIDE NUMBER PLATE – PAIR – WHITE – STANDARD
8	TCC60005BLK	SIDE NUMBER PLATE – PAIR – BLACK
8	TCC60005	SIDE NUMBER PLATE – PAIR – YELLOW
8A	HCBC0516	M5X16mm SOCKET HEAD CAP SCREW (3 REQ'D)
8B	HCBF0630	M6X30mm FLANGE HEAD BOLT – SILENCER (2 REQ'D)
8C	TCC60017	BODY PANEL WASHER 5mm (3 REQ'D)
8D	TCC60016	BODY PANEL WASHER 6mm (2 REQ'D)
9	TCC60007WHT	FENDER – REAR – WHITE – STANDARD
9	TCC60007BLK	FENDER – REAR – BLACK
9	TCC60007	FENDER – REAR – YELLOW
9A	HCSP0003	PLASCREW – FENDER TO AIRBOX (2 REQ'D)
9B	HCBC0516	M5x16mm SOCKET HEAD CAP SCREW (2 REQ'D)
9C	HCWP0002	WASHER - BODY PANEL FLAT (2 REQ'D)
9D	HCHA0003	CLIP NUT – M6
ACCESSORY	TCMU2012	GRAPHIC KIT
ACCESSORY	TKC60001B	BODYWORK KIT - BLACK
ACCESSORY	TKC60001W	BODYWORK KIT - WHITE

Parts – Rear Brake

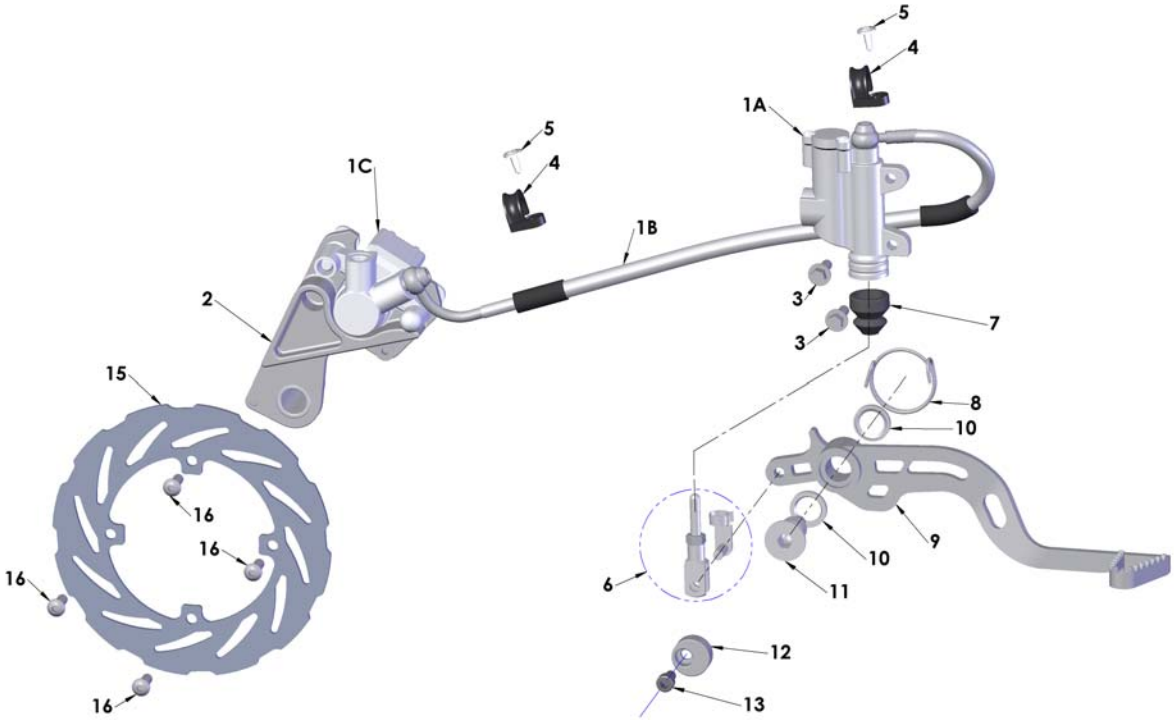

Rear Brake System		
REF #	PART #	DESCRIPTION
1	BAC60005	BRAKE ASSEMBLY REAR
1A	BCC60028	BRAKE MASTER CYLINDER CX65 8mm
1B	BCC60027	BRAKE LINE REAR CX65
1C	BCC60029	BRAKE CALIPER CX65
2	BAC60006	BRAKE BRACKET
3	HCBF0620	M6X20mm FLANGE HEX-8MM HEAD
4	HCCC0005	BRAKE - HOSE GUIDE (2 REQUIRED)
5	HCPP0832	#8X1/2 SELF TAPING SCREW (2 REQUIRED)
6	BCDC0004	BRAKE PUSH ROD ASSEMBLY WITH CLEVIS - CX65
7	BCMU0022	BRAKE - RUBBER CAP - BOTTOM OF MASTER CYLINDER
8	BCMUSP02	BRAKE SPRING RETURN
9	BCMU0099	BRAKE PEDAL
10	BCMU0501	SEAL-BRAKE PEDAL (2 REQUIRED)
11	BCDC0009	BRAKE PEDAL PIVOT BOLT
12	FCEX0018	BRAKE ADJUST ECCENTRIC
13	HCBC0612	M6X12mm SOCKET HEAD CAP SCREW
15	BCC60004	BRAKE ROTOR REAR
16	HCBB0616	M6X16mm BUTTON WITH THREAD LOCK rotor bolts (4 REQUIRED)
ACCESSORY	BCKG0031	BLEED KIT (MULTIPLE SYRINGES, FITTINGS & HOSE)
ACCESSORY	BCC60030	BRAKE PAD SET CX65 SEMI-METALLIC
ACCESSORY	BCC60031	BRAKE BELLOWS KIT CX65
ACCESSORY	BCC60032	BRAKE CALIPER PISTON KIT CX65 (2 REQUIRED)
ACCESSORY	BCC60033	BRAKE BLEED SCREW KIT CX65
ACCESSORY	BCC60034	BRAKE CAP ONLY BLEED SCREW CX65
ACCESSORY	BCC60035	BRAKE MASTER CYLINDER CAP & SEAL KIT
ACCESSORY	BCC60036	BRAKE MASTER CYLINDER REBUILD KIT
ACCESSORY	BCC60037	BRAKE CLEVIS KIT
ACCESSORY	BCC60038	BRAKE BANJO BOLT AND WASHER KIT
ACCESSORY	BCC60045	SHARK FIN

Parts – Rear Wheel

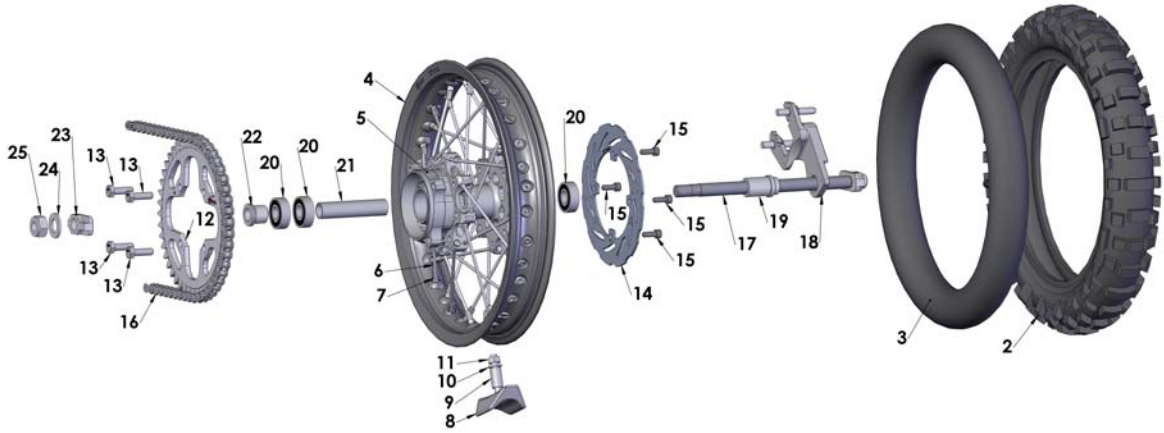

Rear Wheel		
REF #	PART #	DESCRIPTION
1	WAC6RR01B	WHEEL 12" REAR W BEARINGS (NO TIRE, TUBE, ROTOR OR SPROCKET), BLACK
2	WCC6R012D	TIRE – DUNLOP- 80/100-12 MX51
3	WCDCTU12	TUBE-275-80/100-12 REAR
4	WCMU1200B	12" RIM, BLACK
5	WCDCHB02	HUB FOR CX65-REAR
6	WCDC0003	SPOKE-REAR WHEEL-65 (32 REQ'D)
7	WCDC0011	NIPPLE-SPOKE 9GA. STAINLESS (32 REQ'D)
8	WCDC0001	RIM LOCK - 1.4/1.6
9	WCDC0008	RIM LOCK SPACER
10	HCWF0801	8mm FLAT WASHER
11	HCNS0801	8mm NUT
12	PCDC00xx	SPROCKET – xx denotes number of teeth (37-53)
13	HCBH0825	M8X25mm HEX HEAD (4 REQ'D)
14	BCC60004	BRAKE ROTOR REAR
15	HCBC1616	M6X16mm SHCS WITH THREAD LOCK (4 REQ'D)
16	PCMU0116	CHAIN 420H 116 LINK CX65 14/48
17	WCC60004	AXLE REAR CX65
18	BAC60006	BRAKE BRACKET ZL086
19	WCC60003	WHEEL SPACER 65 REAR RIGHT
20	WCMU0120	BEARING, WHEEL
21	WCC60007	SPACER WHEEL BEARING REAR
22	WCC60005	WHEEL SPACER 65 REAR LEFT
23	GCC60010	CHAIN ADJUST BLOCK OFFSET
24	HCWF1400	14mm FLAT WASHER
25	HCNL1402	M14 LOCKNUT
26	WCMU0109	WASHER-NIPPLE (NOT REQUIRED ON ALL MODELS)

Parts – Shock

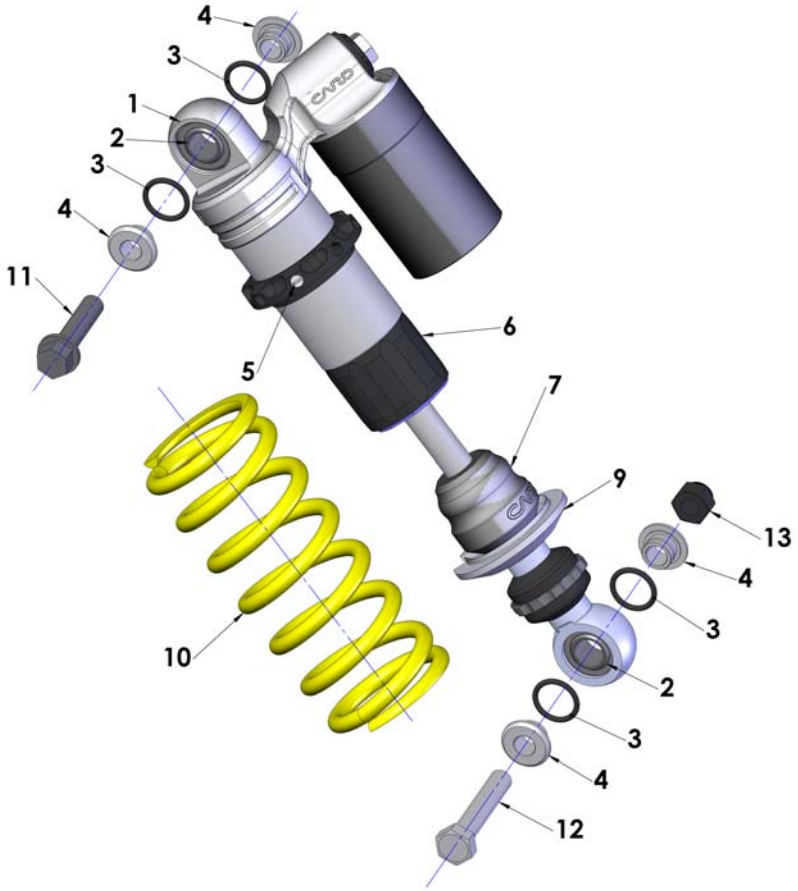

Shock		
REF #	PART #	DESCRIPTION
1	SAC62011	SHOCK ABSORBER – CX65
2	SCMU0043	SHOCK - BEARING SPHERICAL SHOCK MOUNT–CARD (2 REQ'D)
3	SCMU0039	O-RING - SHOCK - BUSHING – CARD (4 REQ'D)
4	SCMU0042	SHOCK - MOUNT BUSHING – CARD (4 REQ'D)
5	SCMU0058	SHOCK - WHITE NYLON TIP SETSCREW M6-1.0 - CARD
6	SCMU0056	SHOCK - SLEEVE BLACK - CARD
7	SCMU0100	BUMPER - TAPPERED - SHOCK
8	SCMU0040	SHOCK - SPRING PAD - CARD
9	SCMU0054	SHOCK - SPRING PERCH - CARD
10	SCC60260P	SPRING STANDARD 260 LB/IN (45 N/mm) (YELLOW)
10	SCC60240P	SPRING EXTRA LIGHT 240 LB/IN (42N/mm) (WHITE)
10	SCC60280P	SPRING HEAVY 280 LB/IN (49 N/mm) (GOLD)
10	SCEX1300	SPRING HEAVY 300 LB/IN (53 N/mm) (RED)
11	HCBF1040	M10 X 40 HEX HEAD BOLT
12	HCBH1055	M10 X 55 HEX HEAD BOLT
13	HCNL1001	10mm LOCKNUT-REGULAR

Parts – Shock – Inside

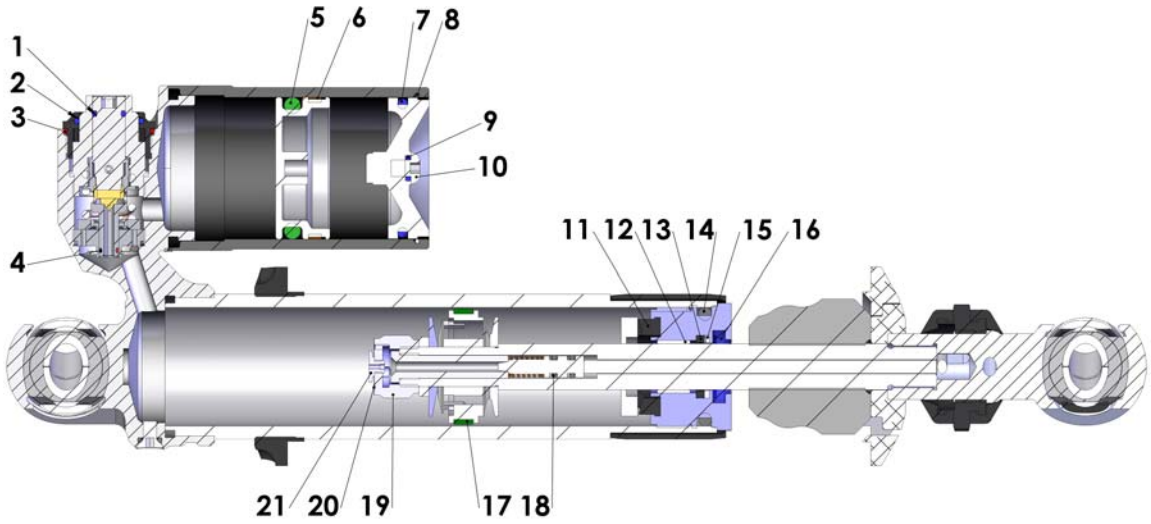

Shock		
REF #	PART #	DESCRIPTION
1	SCMU0037	RING LOW SPEED COMP ADJUSTER
2	SCMU0038	O-RING HIGH SPEED COMP ADJUSTER
3	SCMU0036	O-RING COMP ADJUSTER CAP
4	SCC60007	O-RING COMPRESSION ADJUSTER
5	SCMU0051	O-RING - IFP
6	SCMU0052	IFP SEAL BAND
7	SCMU0033	O-RING SHOCK BASE
8	SCMU0050	RESERVOIR CAP RETAINER RING
9	SCMU0035	O-RING CHARGE CAP
10	HCBB0506	M5X6mm LONG BUTTON HEAD STAINLESS STEEL
11	SCMU0044	SHOCK - SEAL HEAD BUMPER
12	SCMU0048	SHAFT BUSHING
13	SCMU0046	SHOCK - X-RING SEAL
14	SCMU0034	O-RING SEAL HEAD
15	SCMU0047	SPACER - X-RING
16	SCMU0045	SHOCK - DUST SEAL
17	SCC60014	PISTON BAND
18	SCMU0059	O-RING REBOUND PIN
19	SCC60013	CHECK VALVE NUT
20	SCC60011	CHECK VALVE SHIM .10 X 17 X 6
21	SCC60012	CHECK VALVE BOLT

Parts – Swingarm Assembly

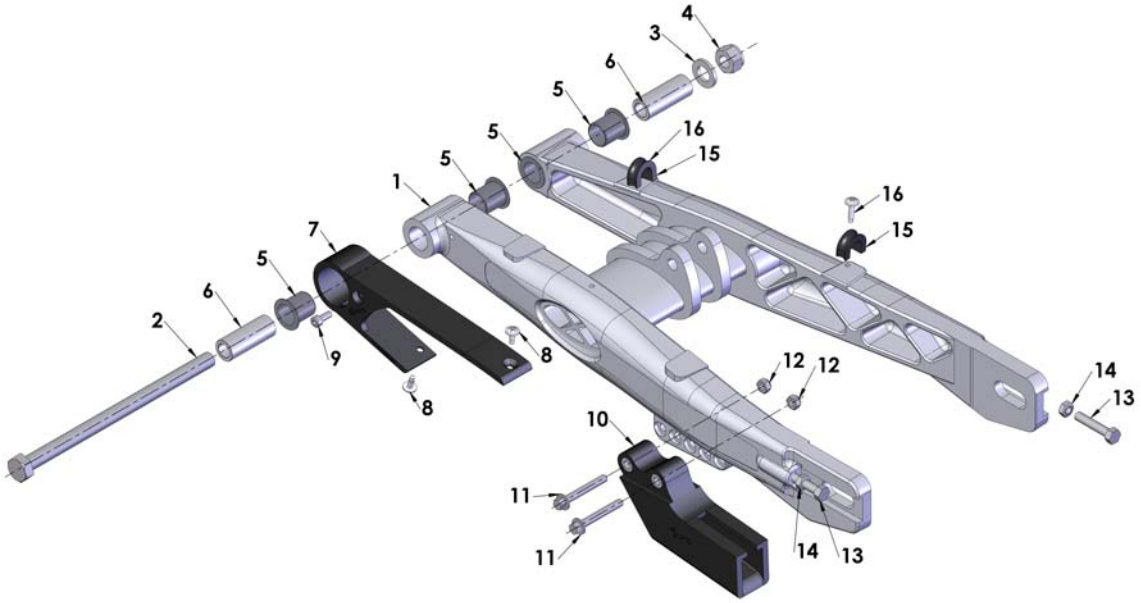

Swingarm		
REF #	PART #	DESCRIPTION
1	GACX6511	SWINGARM ASSY ALUMINUM
2	GCC60015	BOLT - SWINGARM PIVOT
3	HCWF1202	12mm WASHER – SWINGARM PIVOT
4	HCNL1201	M12 LOCK NUT – SWINGARM PIVOT
5	GCC60002	SWINGARM BUSHING 07 65 (4 REQ'D)
6	GCC60001	SWINGARM PIVOT TUBE SPACER 07 65 (2 REQ'D)
7	TCC60004	CHAIN SLIDER TOP FOR SWINGARM
8	HCPP0832	#8 X 1/2 SELF TAPING SCREW (2 REQ'D FOR CHAIN SLIDER)
9	HCBC0501	M5X12mm SHCS – CHAIN SLIDER MOUNT
10	PCC60004	CHAIN GUIDE (BOTTOM) CX65
11	HCBF0640	M6X40mm FLANGE HEAD BOLT (2 REQ'D)
12	HCNL0601	M6 LOCK NUT (2 REQ'D)
13	HCNS0701	M7 NUT (2 REQ'D)
14	HCBH0701	M7X35mm HEX HEAD FULL THREAD (2 REQ'D)
15	HCCC0005	BRAKE - HOSE GUIDE (2 REQ'D)
16	HCPP0834	#8X3/4 SELF TAPING SCREW (2 REQ'D)

Service

This portion of the manual is still under development. If you have questions please call the Cobra technical support line at 517 437 9100.

Engine Service

One method for determining whether the top end of your engine needs rebuilt is to perform a WOT (Wide Open Throttle) kicking compression test. Before performing the procedure please read the caution notes below.

CAUTION:

- There appears to be a wide range of variability in reading compression gauges across the country.

- The head volume of this Cobra Motorcycle is very small and so requires many kicks ~20 before you establish the most accurate reading possible.

- Because of the geometry of the spark plug used in this Cobra Motorcycle, the adapter used with your compression tester must have a similar volume protruding into the combustion chamber to establish an accurate value.

- Length of hose on the compression tester will affect the reading. The shorter the hose length the more accurate your reading will be.

Because of these difficulties in measuring an *absolute* compression value, a useful *relative* value can be achieved by testing your bike's compression with your own particular gauge after a new top end or when the bike is new so that you know what your particular gauge reads on a 'fresh' engine. When it has dropped to 90% of its original value the engine will be down on power and would benefit from a rebuild. When it's dropped to 80% it really needs rebuilt! Using the table below will help you determine monitor the condition of your top end.

	Engine is Fresh Measured Value	Engine Down on Power Measured Value * 0.9	Engine NEEDS Rebuilt Measured Value * 0.8
Example	110 psi	110 psi * 0.9 = 99 psi	110 psi * 0.8 = 88 psi
Your Values			

Procedure for Compression Testing

1. Shut off the fuel petcock.
2. Install the compression gauge into the spark plug hole.
3. Hold the throttle to wide open, and kick repeatedly (approximately 20 times) or until the gauge reading does not increase in value with each kick.

Base Gasket Selection

Tools required

- 17mm wrench
- 1mm flexible solder material
- measurement calipers

When rebuilding the ‘top end’ of your Cobra motorcycle, care must be taken to ensure the proper squish clearance. Squish clearance is defined as the minimum distance between cylinder head and piston at TDC, and there are negative effects of either having too much or too little clearance. Since parts like the crank, connecting rod, cylinder head, piston, and crankcases all have varying tolerances, Cobra offers several different base gasket thickness’ to ensure that you can always set the squish clearance of your engine to factory specifications.

For base gasket replacement use the code (see figure 21 for location) along with the table on the following page reorder the correct thickness gasket.

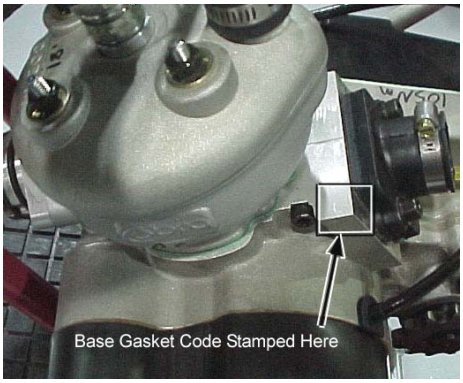

Figure 21

Supplied Base Gasket Thickness		Cobra #
mm	inch	
0.2	0.010	ZCC60202
0.3	0.0125	ZCC60203
0.4	0.015	ZCC60204
0.5	0.020	ZCC60205
0.6	0.025	ZCC60206
0.8	0.031	ZCC60130

NOTE: Tolerances will affect the actual gasket thicknesses.

If during the course of the maintenance more parts than the base gasket are changed, the squish clearance should be measured, and possibly a different base gasket will be required.

The easiest way to measure squish clearance is with 1mm to 1.5mm thick flexible solder wire (available through most popular electronic stores). The process is as follows:

- Assemble the top end of the engine with either; 1) the crankcase stamp recommended base gasket or, 2) if assembling with a new set of cases assemble with a 0.4mm (0.015”) base gasket, and torque the head nuts to the proper torque specifications leaving off the spark plug and ignition cover (piston rings can be left off to ease assembly).
- Carefully insert the solder wire though the spark plug hole, into the cylinder far enough such that the tip of the wire touches the left or right side cylinder wall (not the front or back as the piston will rock more and give incorrect measurement).
- Hold the wire at this position and rotate the crankshaft, by the flywheel nut (or kick lever) three revolutions to ‘smush’ the solder wire.

CAUTION:
If you rotate the flywheel nut in a counterclockwise direction there is a risk of loosening the nut.

- Pull out the wire and measure the solder thickness at the thinnest location near its tip accurately with the thin tips of calipers.
- Adjust base gasket thickness as necessary to get the desired value.

Upon completion, your final assembly squish clearance should agree with the chart below

Power Valve

Disassemble to remove cylinder

1. Unscrew front cap (12mm wrench) exposing plunger clip.

CAUTION
Do not allow the solenoid to rotate. Resist solenoid rotation with finger pressure or pliers.

2. Remove plunger clip (pliers).
3. Loosen adjustable hose clamp (flat blade screw driver) on the boot near the engine.
4. Unplug electrical connection to solenoid.
5. Slide the solenoid forward toward the fender

NOTE:
You will have to take off the front fender if removing it from the frame

6. Disconnect solenoid plunger from cable and remove.

NOTE:
At this time the cylinder can be removed.

7. Remove the PV cap from the cylinder with 4mm hex key.
8. Remove the cap, spring and valve with cable attached.

Cleaning and Inspection

- Clean the valve, removing the oily exhaust residue with solvent or carb cleaner.
- Scrape the valve of carbon buildups and inspect for cracks on the last couple of threads.
- If the cylinder is being removed then spray out the valve cavity with solvent or carb cleaner.

Valve Assembly into cylinder

1. Install jam nut onto valve threads of the valve far enough as to allow the cable nut to thread on all the way
2. Install the cable nut (with cable) and thread until bottomed. Torque to 12 Nm.
3. Tighten the jam nut to the cable nut and torque to 12 Nm.
4. Insert the valve into the valve cavity in the cylinder.
5. Install the valve return spring
6. Assemble the valve cap and secure with the two screws. Torque to 4 Nm

Reassembly and verification

1. With the cylinder, valve, spring and cap installed on the engine, connect the plunger to the cable by sticking it through the frame tunnel

HINT:
Insure that the adjustable hose clamp is hanging on the power valve cap, on the engine, at this time.

2. Insert the solenoid connector through the frame tunnel followed by the solenoid assembly, boot end first, sliding the plunger through it.

3. Align the 3 indicator marks on the top of the solenoid boot with the 3 grooves on the top of the valve cap mounted to the cylinder and install through the hose clamp and as far onto the cap as it will slide. The wires will exit toward the right side of the engine.
4. If the plunger is not poking out the front of the solenoid assembly at this point use your finger, in the exhaust passage on the valve, to push up so that the plunger sticks proud of the solenoid assembly. Now install the clip through the small hole in the end of the plunger.

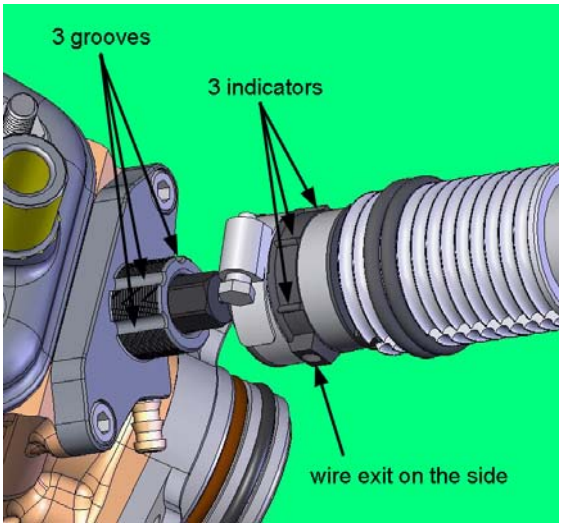

5. Pull on the plunger with pliers to first 'top-out' the plunger inside the solenoid, and then continue pulling until the valve is open and flush with the top of the exhaust port. Tighten the adjustable hose clamp on the solenoid boot.
6. Connect the electrical connection and secure wires.
7. Apply grease to the o'ring and install the cap (hand tight).

Verification of proper adjustment (two similar methods)

If the valve is out of adjustment it can either not open all the way or not close all the way. The valve is properly open when it is flush with the top of the exhaust passage (must feel the inside of the exhaust passage by entry from the exhaust manifold.

⚠ WARNING

Do not allow the engine kick lever to be operated while fingers are in the cylinder. Loss of limb could result.

If the solenoid is adjusted too far down, it will not open all the way and a step will be present at the top of the passage. If the solenoid is adjusted up to far it may not allow the solenoid to close all the way as the clip on the plunger will stop its return.

Proper adjustment allows the valve to rise flush with the top of the exhaust passage with the solenoid 'topped out' internal to the solenoid, and allows the valve to 'clack' shut just prior the plunger travel being stopped by the little clip on the closing.

1. Remove the exhaust pipe.
    a. Finger test (method 1)

i. Pull the plunger forward/upward/outward until resistance is felt. The valve should be flush with the top of the exhaust passage
ii. Let go of the plunger and it should 'clack' shut with an audible noise as the valve reaches the stop.

b. Battery test (method 2)
   i. Disconnect the solenoid connector. Using a 13V -24V battery and some jumpers apply power to the solenoid and feel that the valve is flush with the top of exhaust passage.
   ii. Disconnect the electrical power and listen for the valve to 'clack' shut.

Exhaust

The 2012 pipe is produced by HGS.

The exhaust flange to pipe sealing arrangements as shown. This seals better and damps noise and vibration. Please note that there are three o'rings now instead of two. They are not all the same. The o'ring closer to the cylinder is the same old ZCMOTE11 o'ring. The other two (the one mounting on the flange further from the cylinder and the one inserted in the pipe's header flange) are black in color and thicker (ZCMUOR20).

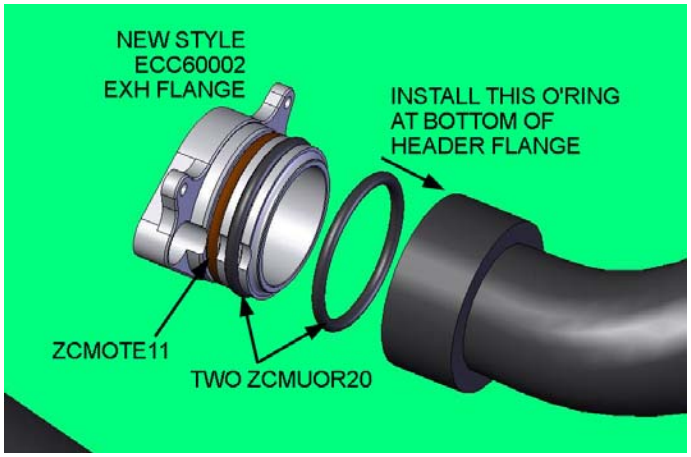

Fuel & Air System

Carburetor:

Tools recommended for carburetor service:

- Small flat head screwdriver
- WD-40
- 6mm socket

Your Cobra is equipped with an adjustable carburetor. Some fine-tuning may be needed according to weather condition and altitude. Proper jetting is ***very*** important for engine performance and engine life. Serious damage to the engine can occur if not properly adjusted.

IDLE ADJUSTMENT:
On the each side of the carburetor, there are two adjustment screws. The right side screw with the knurled head is the idle adjustment screw. To raise the idle, turn the screw in clockwise (in 1/4 turn increments) and rev the engine after each adjustment. To lower the idle, turn the screw counter-clockwise.

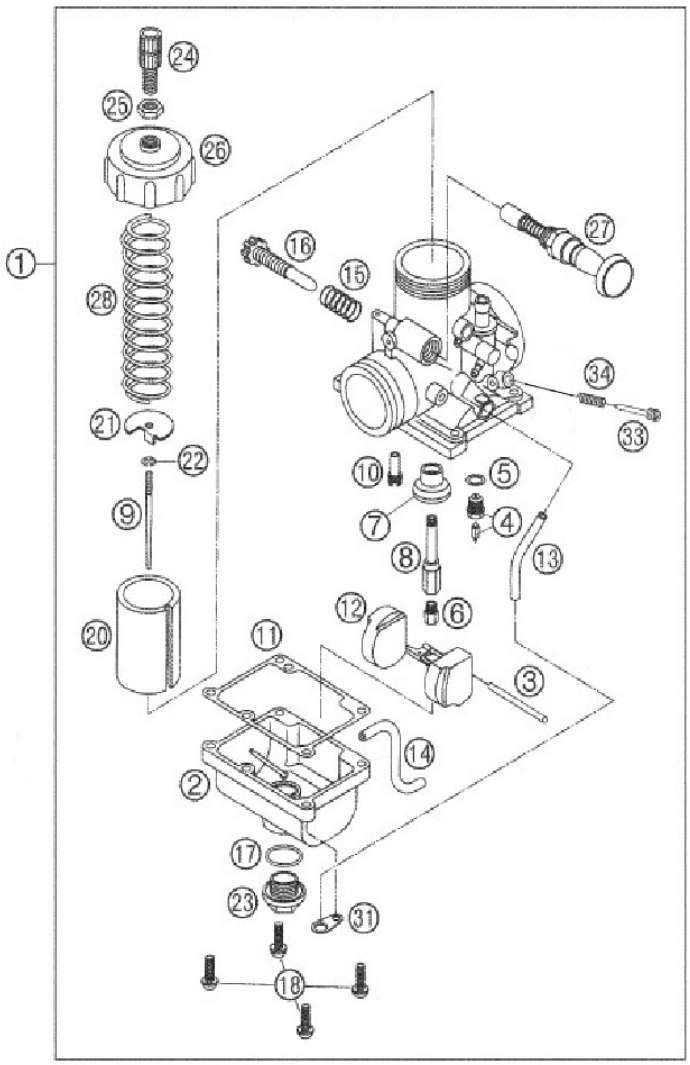

TOP END JETTING:
Indications that the engine is running too rich (too much fuel for the air) are:

- Engine not revving out or blubbering at high RPMs.
- Engine will not 'clean out'
- Wet or black spark plug

NOTE: Before changing jetting be sure that the air filter is properly cleaned and has the usual amount of air filter oil. An overly dirty air filter can cause the engine to run rich.

If the engine is running rich on the top end it should be leaned out. Leaning it out can be done by:

1. Changing the main jet to a smaller number.
2. Raising the needle clip (this lowers the jet needle) one notch at a time on the slide.

Indications that the engine is running too lean are:

- Engine cutting out on top end.
- Engine overheating and ultimately seizure.
- White spark plug

CAUTION:
It is much safer to operate the engine slightly rich as opposed to slightly lean. This is because an overly rich engine will just run poorly while an overly lean engine will seize, potentially causing an expensive top end rebuild and a DNF.

To richen the carburetor:

1. Change the main jet one number at a time (larger).
2. Lower the needle clip (raising the jet needle) one notch at a time until the engine starts to blubber on the top end, then move the clip back up one notch or until you get the blubber out.

FUEL MIXTURE SCREW
The left side brass screw is a fuel mixture (air) screw. This screw will also richen and lean your engine more on the bottom and mid-range. In warmer conditions, turn the screw in. In colder conditions, turn the screw out. Be sure to keep the carburetor very clean and make sure you don't have water or dirt in the carburetor bowl. Use automotive carburetor cleaner or WD-40 to clean the carburetor inside and out. Turning the screw in richens the mixture at partial throttle openings. Turing the screw out, leans it.

STOCK CARBURETOR SETTINGS
The 2009 CX65 stock carburetor settings from the factory are:
- 40 pilot jet
- 210 main jet

Cleaning the carburetor:

⚠ WARNING
Clean the carburetor in a well-ventilated area, and take care that there is no spark or flame anywhere near the working area; this includes any appliance with a pilot light. Because of the danger of highly flammable liquids, do not use gasoline or low flash-point solvent to clean the carburetor.

1. Make sure the fuel is shut off.
2. Remove the carburetor.
3. Drain the fuel from the carburetor.
4. Disassemble the carburetor.
5. Immerse all the metal parts in a carburetor cleaning solution.
6. After the parts are cleaned, dry them with compressed air.
7. Blow out the fuel passages with compressed air.
8. Assemble the carburetor
9. Install the carburetor onto the motorcycle.

Rear Shock

The rear shock is fully serviceable but it is recommended that only trained professionals should service your shock. Contact Cobra or another qualified specialist (PR2, MCR, etc..) for questions and service of your CX65shock.

Shock preload

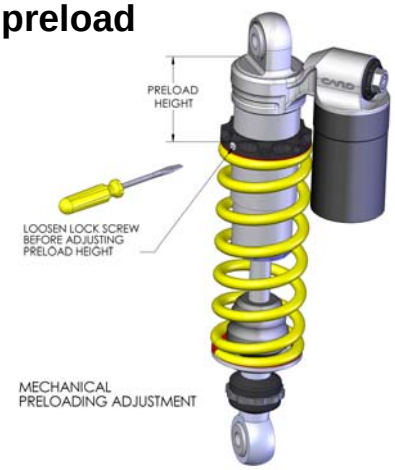

Shock Damping

11. Adjustment of rebound damping

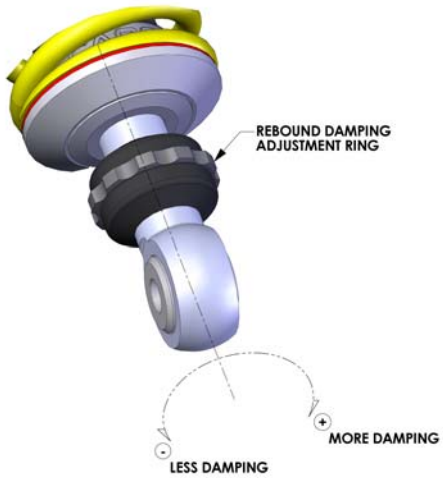

12. Adjustment of compression damping

Tuning

Gearing

Front Sprocket				Rear Sprocket	Gear Ratio
			15	37	2.47
			15	38	2.53
			15	39	2.60
		14		37	2.64
			15	40	2.67
		14		38	2.71
			15	41	2.73
		14		39	2.79
			15	42	2.80
	13			37	2.85
		14		40	2.86
			15	43	2.87
	13			38	2.92
		14		41	2.93
			15	44	2.93
	13			39	3.00
		14		42	3.00
			15	45	3.00
			15	46	3.07
		14		43	3.07
	13			40	3.08
12				37	3.08
			15	47	3.13
		14		44	3.14
	13			41	3.15
12				38	3.17
			15	48	3.20
		14		45	3.21
	13			42	3.23
12				39	3.25
			15	49	3.27
		14		46	3.29
	13			43	3.31
12				40	3.33
			15	50	3.33
		14		47	3.36
	13			44	3.38
			15	51	3.40

Suspension

Adjustment:

1. Front forks
    - 1.1. Fork oil
        - 1.1.1. Oil type
            - 1.1.1.1. Heavier weight oil – more damping – slower responding
            - 1.1.1.2. Lighter weight oil – less damping – quicker responding
        - 1.1.2. Oil quantity / level
            - 1.1.2.1. Greater quantity / higher level – greater bottoming resistance, stiffer near the end of the travel.
            - 1.1.2.2. Smaller quantity / lower level – less bottoming resistance, less stiff near the end of the travel.
    - 1.2. Fork spring
        - 1.2.1. Stiffer spring (higher spring rate) – stiffer throughout the travel.
        - 1.2.2. Less stiff spring (lower spring rate) – less stiff throughout the travel.
    - 1.3. Gas pressure – always bleed off any pressure.
    - 1.4. Fork height
        - 1.4.1. Rise in clamps for quicker turning.
        - 1.4.2. Lower in clamps for improved straight line stability.
2. Rear shock
    - 2.1. Preload adjustment
        - 2.1.1. More preload (greater distance) – less race sag.
        - 2.1.2. Less preload (smaller distance) – more race sag.
    - 2.2. Shock spring
        - 2.2.1. Stiffer spring – stiffer throughout the travel.
        - 2.2.2. Less stiff spring – less stiff throughout the travel.
    - 2.3. Compression damping
        - 2.3.1. Harder (more damping, slower) – adds resistance to the suspension motion when the suspension is compressing.
        - 2.3.2. Softer (less damping, quicker) – reduces resistance to the suspension motion when the suspension is compressing.
    - 2.4. Rebound damping
        - 2.4.1. Harder (more damping, slower) – adds resistance to the suspension motion when the suspension is returning to full length.
        - 2.4.2. Softer (less damping, quicker) - reduces resistance to the suspension motion when the suspension is returning to full length

Front Forks Bottoming Too Frequently **Fork oil level**

If the front forks bottom harshly more than a couple of times per lap and the fork springs are proper for the weight of rider (as detailed above), try raising the fork oil level in increments of 10mm. Raising the fork oil level, reduces the air volume, and increases the stiffness of the forks late in the travel, thus adding a progressive' feel.

Front forks feel too stiff over small bumps. **Fork oil weight**

If the forks feel too stiff over small bumps try decreasing the weight (increasing the viscosity) of the fork oil.

Rear suspension troubleshooting. **Damping**

Always start with standard settings and make damping changes in no more than two click increments and only make one change at a time.

Symptom	Action
Rear end feels stiff on small bumps	Softer compression damping
Rear end ‘sways’ on straights	Harder compression damping
Bike tends to jump ‘rear end high’	Harder rebound damping
Bike tends to jump ‘rear end low’	Softer rebound damping
Frequent rear end bottoming	Harder compression damping
Bottoms after end of continuous bumps	Softer rebound damping
Rear end ‘kicks’ over square edge bumps	1) Harder rebound, 2) Softer Compression

Proactive Suspension Adjustments

Once you have the suspension adjusted for decent overall feel, you can make proactive adjustments when faced with different racing conditions.

Situation	Actions
Sand track	Lower the rear end (increase race sag).
Sand track	Stiffer compression and rebound damping.
Long fast track	Lower the forks in the clamps by 3 mm.
Tight slow track	Raise the forks in the clamps by 3 mm.
Mud track	Lower the bike if the rider has difficulties touching the ground.

Carburetion

Although your Cobra is sent from the factory with the carburetor jetted for optimal performance, you may find it necessary to adjustment your particular jetting due to current weather conditions, altitude, fuel variations, and/or engine modifications.

CAUTION:
Proper jetting is very important for engine performance and engine life. Symptoms of improper jetting are listed below.

- Symptoms of incorrect oil or oil / fuel ratio
    - Poor acceleration
    - Misfire at low engine speeds

- Excessive smoke
- Spark plug fouling
- Excessive black oil dripping from exhaust system

- Symptoms of too rich a fuel mixture
  - Poor acceleration
  - Engine will not ‘rev’ out, blubbers on top
  - Misfire at low engine speeds
  - Excessive smoke
  - Spark plug fouling
  - Wet, black, or overly dark spark plug (when removed for inspection)
- Symptoms of too lean a fuel mixture
  - Pinging or rattling
  - Erratic acceleration
  - Same actions as running out of fuel
  - High engine temperature
  - White spark plug (when removed for inspection)

NOTE: When inspecting the spark plug to evaluate jetting, a properly jetted machine will produce a spark plug that is dry and light tan in color.

Environmental and altitude related mixture adjustments		
Condition	**Mixture will be**	**Required adjustment**
Cold air	Leaner	Richer
Warm air	Richer	Leaner
Dry air	Leaner	Richer
Very humid air	Richer	Leaner
Low altitude	Standard	None
High altitude	Richer	Leaner
Low barometric pressure	Richer	Leaner
High barometric pressure	Leaner	Richer

NOTE: Before making any carburetor jetting changes verify that:
- You are using the proper fuel and oil
- The fuel is fresh and uncontaminated
- The oil and fuel have been mixed in the proper ratio
- The carburetor is clean (no plugged jets)
- The air filter is properly clean and oiled
- The float height is within proper specification (proper measuring technique is described later in this section)

NOTE: Perform all jetting changes on a motorcycle that has been warmed up to proper operating temperature.

The carburetor on your Cobra motorcycle is quite adjustable. Figure 49 shows its range of adjustment and in particular what adjustable component affects what range of operation (specifically throttle position).

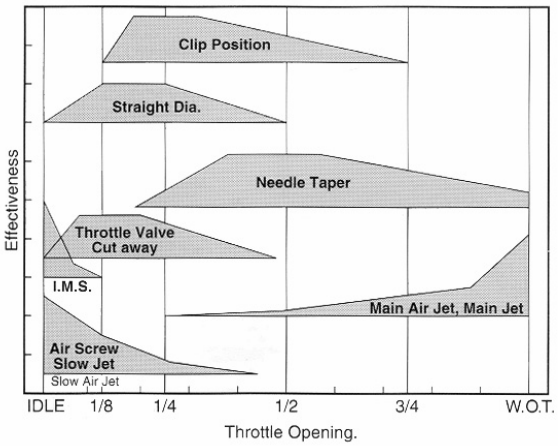

FUEL SCREW ADJUSTMENT: Adjust for throttle response

The air adjustment screw is located on the left side of the carburetor. It requires the use of a small flat blade screw driver for adjustment. After adjusting for proper throttle response, use the idle screw to adjust the desired idle speed.

NOTE:

If the air screw requires more than 3 turns out, replace the pilot jet for one that is one size leaner (smaller number) then readjust the fuel screw.

IDLE ADJUSTMENT: Adjust for desired idle speed

The idle speed screw is located on the right side of the carburetor. It is hidden behind the exhaust stinger pipe and is barely reachable with a screwdriver. To raise the idle, turn the screw in, clockwise, (in 1/4 turn increments) and rev the engine after each adjustment. To lower the idle, turn the screw counter-clockwise.

TOP END JETTING: Adjust for clean full throttle acceleration

Jet your top end (main jet) based on the acceleration of your Cobra Motorcycle on the longest straight at the track. Observe any of the lean or rich symptoms (spark plug appearance and bike performance) listed above and change your jetting accordingly.

PART THROTTLE Adjust for desired acceleration

Using an area of the track that allows the rider to operate and mid throttle and transition (accelerate, or 'roll on') from closed, or mostly closed throttle, to a larger throttle opening. Observe the rich and lean symptoms listed above. Adjust the jet needle position by moving the clip from its current position (move the clip higher on the needle to make the bike run leaner, or move the clip lower on the needle to make the bike run richer) to one higher or lower.

Troubleshooting

1) **Engine operates erratically**
   a) Carburetor top is installed backwards
   b) The carburetor slide indexing pin is missing
   c) A carburetor vent elbow is plugged or has fallen out
   d) Faulty stator
   e) An air leak
      i) Base gasket
      ii) Intake / reed gaskets
      iii) Crank seals
      iv) Crank case gasket
2) **Engine is down on power**
   a) Jetting is incorrect
   b) Silencer needs repacked
   c) Exhaust pipe
      i) Has excess carbon buildup
      ii) Has large dent in it
   d) Compression is low
      i) Piston
      ii) Rings
   e) Reeds are damaged
   f) Ignition timing is incorrect
   g) Stator needs replaced
3) **Engine is excessively loud**
   a) Silencer needs repacking
4) **Engine ‘blubbers’ at high RPMs**
   a) Jetting too rich
   b) Stator needs replaced
5) **Engine won’t start**
   a) Fuel
      i) None in tank
      ii) Is sour or bad

b) Carburetor is dirty

c) Ignition

   i) Spark plug fouled

   ii) Spark plug cap off

   iii) Engine Shut-off ‘kill’ switch is shorted

   iv) Bad electrical ground

   v) Stator winding damaged

d) Exhaust is plugged with object of flooded fuel

e) Engine is flooded

f) Cracked, broken, or jammed reed pedal

g) Excessive piston or cylinder wear

h) Clutch bolt or shoe dragging on basket (drum).

6) Engine won’t idle

a) Idle knob needs adjusted

b) Carburetor jets are dirty

c) Choke is stuck on

d) Air leak

Index