DISCLAIMER OF WARRANTY

This motorcycle is sold "as is" with all faults, obvious or not. There are no warranties expressed or implied, including any warranty of merchantability and warranty of fitness for any particular purpose.

"WARNING"

THE COBRA CX50JR IS A COMPETITION MODEL ONLY AND IS NOT MANUFACTURED FOR, NOR SHOULD IT BE USED ON PUBLIC STREETS, ROADS OR HIGHWAYS.

THE USE OF THIS BIKE SHOULD BE LIMITED TO PARTICIPATION IN SANCTIONED COMPETITION EVENTS UPON A CLOSED COURSE BY A SUFFICIENTLY SKILLED RIDER AND SHOULD NOT BE USED FOR GENERAL OFF-ROAD RECREATIONAL RIDING.

IMPROPER USE OF THIS MOTORCYCLE CAN CAUSE INJURY OR DEATH.

THIS BIKE IS INTENDED FOR EXPERIENCED RACERS ONLY AND NOT FOR BEGINNERS.

IT IS YOUR RESPONSIBILITY AS THE OWNER OF THIS COBRA MOTORCYCLE OR AS THE PARENT, OR LEGAL GUARDIAN OF THE OPERATOR, TO KEEP THIS COBRA MOTORCYCLE IN PROPER OPERATING CONDITION.

THIS BIKE WAS DESIGNED FOR RIDERS THAT WEIGH LESS THAN 80 LBS WITH FULL RIDING GEAR AND SHOULD NOT BE OPERATED BY RIDERS THAT WEIGH MORE THAN THAT.

BE SURE THAT THE RIDER ALWAYS WEARS ADEQUATE SAFETY GEAR EVERYTIME HE OR SHE RIDES THEIR COBRA MOTORCYCLE.

IMPORTANT SAFETY NOTICE

⚠ WARNING

Failure to follow WARNING instructions could result in severe injury or death to the machine operator, a bystander, or a person inspecting or repairing the machine.

CAUTION:
A CAUTION indicates special precautions that must be taken to avoid damage to the machine.

NOTE:
A NOTE provides key information to make procedures easier or clearer.

Table of Contents

General Information 5
- Specifications - General 5
- Specifications - Torque Values 6
- Optional Components 7
- Break-In Procedure 8
- Starting Procedure 9

Maintenance 10
- Tips 10
- Schedule 11
- Replacing Transmission / Clutch Lubricant 12
- Proper Chain adjustment 13
- Air Filter Cleaning 14
- Fork Oil Replacement 15
- Frictional Drive (CFD) 16

Parts 17
- Parts – Airbox and Inlet System 17
- Parts – Bars and Controls 18
- Parts - Carburetor 19
- Parts - Carburetor 19
- Parts – Coolant System 20
- Parts – Electrical System 21
- Parts – Engine – Bottom End and Transmission 22
  - Parts – Engine Clutch and Kicker 23
  - Parts – Engine – Water Pump 24
  - Parts – Engine – Top End 25
- Parts – Exhaust System 26
- Parts – Forks & Triple Clamps 27
  - Parts – Forks – Leg Assembly 28
- Parts – Frame – Mounting Hardware I 29
  - Parts – Frame – Mounting Hardware II 30
  - Parts - Frame – Mounting Hardware III 31

Parts – Front Brakes 32
Parts – Front Wheel 33
Parts – Plastic Bodywork & Seat 34
Parts – Rear Brake 35
Parts – Rear Wheel 36
Parts – Shock 37
Parts – Swingarm Assembly 38
Service 39
Engine Service 39
Base Gasket Selection 40
Engine Removal 42
Complete Engine Disassembly Procedure 42
Top End Disassembly Procedure 43
Splitting the Cases 44
Engine assembly 44
Clutch 46
Ignition 51
Cooling System 53
Fuel & Air System 56
Exhaust 59
Wheels & Tires 60
Tuning 60
Suspension 60
Rear shock 62
Front Forks 62
Gearing 63
Carburetion 65
Troubleshooting 67
Index 69

General Information

Specifications - General

Items	CX50 JR
Dimensions	
Wheelbase	35.75” (908mm)
Wheel size	10” (254mm)
Seat height	23.9” (607 mm)
Engine	
Type	2-stroke, single cylinder, reed valve
Cooling system	Liquid-cooled
Coolant	50/50 antifreeze-coolant / distilled water
Displacement	49.8 cc
Bore and stroke	39 mm x 41.7 mm, “V” head
Ignition system	Electronic, analogic advance
Spark plug	Champion 8339-1, 8332-1 hotter, 8904-1 colder
Gap	0.023” – 0.025” (0.58 – 0.64 mm)
Ignition timing	0.040” (1.0 mm) Before Top Dead Center (BTDC)
Fuel type	High octane pump gasoline
	RACE FUELS ARE NOT RECOMMENDED
Oil type	*Cobra Venom 2-cycle Race Oil*
Fuel / oil mix ratios	Between 32:1 and 40:1 (after engine Break-In)
Carburetion	14 mm Dell’Orto
Main Jet	92
Slow (Pilot) jet	55
Float Height	16mm ± 0.5mm (0.63” ± 0.020”)
Transmission	
Speed / Clutch	Single / Cobra 3 shoe
Final drive ratio	13/37T or 14/38 T
Chain	420
Transmission / clutch oil type	*Cobra Venom 3 Shoe Clutch Milk*
Quantity	235 ml (8.0oz)

Chassis	
Front tire	2.50 – 10
Pressure	15 psi minimum
Rear tire	2.75 – 10
Pressure	15 psi min. (20 psi for hard pack or rocky conditions)
Front fork	Marzocchi 32mm
Fork oil type	SAE 20 weight
Fork oil amount	200 ml (6.8 oz) oil change, 220 ml (7.4 oz) rebuild
Collapsed fork oil height	70 mm (2.75”) spring in, no spacer

Specifications - Torque Values

Fastener	Torque Value			Size & Remarks
	ft-lb	in-lb	Nm	
Cylinder head nuts	8.8	105	12	M6 X 1.0
Crankcase bolts	8.8	105	12	M6 x 1.0
Spark plug	(SP)	(SP)	(SP)	M14 x 1.25
Stator bolts	2.1	25	2.8	M5 X 0.8
Stator cover bolts	1.7	20	2.3	M4 X 0.75
Clutch cover bolts	5.8	70	7.9	M6 X 1.0
Clutch nut (max.)	40	480	54	10 x 1.25*
Clutch bolts	12	144	16	M6 x 1.0
CFD nut	55	664	75	½” x 20 LHT
Engine mount bolts	22	265	30	M8 X 1.25
Swingarm Pivot	21	250	28	M14 X 2.0
Intake manifold bolts	4.6	55	6.2	M6 X 1.0
Ignition rotor nut	40	480	54	M10 x 1.25*
Rear Sprocket Bolts	18	216	24	M7 X 1.0
Rear shock mounts	40	480	54	M10 x 1.5
Axle nuts	25	300	34	M12 X 1.25

***** Apply high strength thread locking agent when installing

(SP) To apply the proper torque to the spark plug when inserting, one must first screw the spark plug in until the metal gasket ring causes resistance and then turn another 1/8 to ¼ turn.

Optional Components

Call your dealer, or the factory, for details

- Carburetor jets
- Pre-filter for the airbox
- Sprockets
  - Front
  - Rear
- Suspension Springs

Weight of Rider (lb)	Fork Spring	Shock Spring
Less than 38 (light)	KCMZ0012A (12 lb/in, 2.10 N/mm))	SCMUOH04 (275 lb/in) red
38 – 45 (std)	KCMZ0012 (14 lb/in, 2.45 N/mm))	SCMUOH05 (285 lb/in) yellow
46 to 55 (stiff)	KCMZ0012B (16 lb/in, 2.80 N/mm)	SCMU0H06 (295 lb/in) white

- Tires
- Tubes or ‘Tire Balls’

Break-In Procedure

Your Cobra CX50 JR is a close-tolerance high performance machine and break-in time is very important for maximum life and performance. The CX50 JR can be ridden hard after the first ½ hour break-in time but it is recommended that no adjustments are made to the carburetion or suspension until the full 8 hours of bike break-in has elapsed. Also, after the engine, transmission, and drive train have been broken-in for the full 8 hours, the bike will be faster!

Use a fuel / oil mixture of 32:1 for the full 8 hour break-in period. Be sure to use high octane pump gas with Cobra's specially formulated *Cobra Venom 2-cycle Race Oil*. (Part # MCMUOL02)

CAUTION:
Failure to use proper fuel, oil, or fuel/oil mixture may result in premature engine wear or damage to the machine.

Adhering to the following break-in schedule will result in long lasting high performance machine.

- Start bike on stand
- First 5 minute period, operate the bike on the stand with a combination of idle and high RPM operation. (avoid prolonged high RPM but spin the rear wheel good at least once or twice per minute)
- Allow bike to cool
- Ride for 15 minutes maximum (avoid prolonged high RPM operation and avoid abusing the clutch with throttle blipping.
- Cool and inspect bike for loose fasteners.
- Next ½ hour of operation, avoid prolonged operation at Wide Open Throttle.
- After 1 hour of operation
    - Check for loose bolts and nuts on the bike and retighten as necessary (proper toque values are listed under Specifications).
    - Clean the carburetor bowl.
    - Change the transmission / clutch lubricant.
- After 8 hours of operation
    - Change the fork oil.
    - Have a Certified Cobra Mechanic change the shock oil.
- Your bike is now ready for the highest level of competition!

NOTE:
During break-in the bike will likely lose some engine coolant through the radiator overflow hose. Losing up to 4 oz (120 ml, ½ cup) is normal. Proper coolant level will cover the top of the radiator cores. Removing the radiator cap and looking inside is the only way to check the coolant level.

⚠ WARNING

Never open the radiator cap of a machine that has a hot or warm engine or one that has recently been ridden. Burning and scalding could occur.

CAUTION:

It is important that the radiator cap is installed correctly and completely otherwise engine damage could occur.

Starting Procedure

Before starting the machine inspect the following:

- Check for proper tire pressure in both tires.
- Observe the chain tension and adjust if necessary.
- Observe the coolant level and fill if necessary.
  Verify that the chain rollers and sliders do not have improper wear.
- Verify that the handlebars are tight.
- Check the throttle for smooth operation and that it ‘clacks’ shut properly.
- Check for loose bolts and nuts, and re-torque as necessary.
- Verify that the air filter is clean and properly saturated with oil.
- Insure that the fuel tank contains an adequate volume of fuel / oil mixture to complete the distance required. (High octane pump gas with Cobra’s specially formulated *Cobra Venom 2-cycle Race Oil*)
- Turn the fuel on by rotating the fuel petcock knob to the vertically downward position (reserve position is horizontally forward)

CAUTION:

For best results from your Cobra Motorcycle use only the recommended fuels. Testing has shown that most ‘race’ fuels actually degrade performance.

⚠ WARNING

Always wear a helmet and other protective riding gear.

When your pre-ride inspection is complete the bike may be started. For a cold engine follow this procedure.

1. Place the motorcycle on a stand of sufficient strength that positions the motorcycle in a level upright position with the rear wheel off the ground.
2. Pull up the choke knob and turn it to lock it.
3. Kick start the engine.
4. Rev the engine in short spurts, turning the throttle no more than 1/4 open until the engine will run without the choke.
5. Verify a functional engine shut-off switch by shutting off the engine.
6. Restart the engine and proceed with riding when the engine is sufficiently warm (i.e. the side of the cylinder is warm to touch).

CAUTION:
Never rev an engine full throttle when it's cold or slightly warmed up. Also, for best clutch performance, warm up the bike before taking off.

⚠ WARNING
This is a high performance race motorcycle. Too much application of throttle will likely land your little racer on his or her arse. Fenders can be replaced but bruised egos and other body parts take longer.

CAUTION:
Cobra recommends that you tell your child to take it easy the first couple of minutes in practice until the engine comes up to full operating temperature.

CAUTION:
Make sure your riders' foot is not resting on the foot brake while they are riding.

Maintenance

It is important that you adhere to this maintenance schedule so as to promote the longevity of your Cobra Motorcycle.

Tips

1. Cobra lubricants:
    a. Cobra Clutch Milk has been specifically formulated to meet the stringent temperature, frictional, and load requirements unique to the high engine speeds and centrifugal clutch of the Cobra 50cc motorcycles.
    b. Cobra Two Cycle Oil exceeds the JASO FD & ISO-L-EGD specifications, which are the worlds most stringent requirements on lubrication, detergency, and smoke. Use only a 2-cycle oil that meets these specifications.
2. Filling your transmission with more than 8.0 oz (235 cc) of lubricant may help to transfer heat from the clutch. Filling with more than 12 oz (295 cc) will degrade performance.
3. The cylinder base gasket has been 'fitted' for your engine. The code number stamped into the engine cases will guide you to what thickness base gasket is required during a common top end service. See the service section of this manual to correspond a code number with a base gasket part number.
4. Evaluate the bikes jetting only after it has been warmed up to race temperatures.
5. A properly maintained machine is safer, faster, and more fun to ride.
6. New chains will stretch on first use. Never install a new chain prior to a race. Always 'break' them in during practice.

7. Your Cobra Motorcycle has a 10 digit VIN (Vehicle Identification Number). The first two digits indicate the model and the seventh indicates the model year (MY).
    a. Example, CMxxxx7xxx is a 2007 MY CX50 JR.

Schedule

- Between each ride
    - Check the air filter (clean and re-oil as necessary).
    - Insure the smooth operation of the throttle cable (throttle soundly 'clacks' shut).
    - Check for frayed strands of the throttle cable inside the throttle housing and replace if necessary.
    - Check for adequate tire pressures and adjust if necessary.
    - Check all nuts and bolts for proper torque and re-torque if necessary.
    - Spray all moving parts with WD40 or other light oil.
    - Check drive chain for
        - Proper tension and adjust if necessary.
        - Adequate lubrication and lubricate if necessary.
    - Insure that the ignition stator and rotor are clean and dry.
    - Check the frame for cracks in the metal or cracks in the paint that might indicate that the metal has been stressed beyond it's safe limits. Replace or get properly rewelded as necessary.
    - Check the rims for signs of stress, like cracks around the rim, spokes and hub.
- Every 2 hours of operation
    - Replace the transmission oil.
- Every 10 hours of operation
    - Replace the fork oil.
    - Have the shock oil replaced by a Certified Cobra Mechanic.

CAUTION:

1. Because of the amount of heat generated by the clutch and engine during extended periods of riding, it is advisable to remove the ignition cover afterward to allow the ignition to cool off. The heat transfers through the cases and can damage the stator as it cools off because of lack of airflow around the stator.

2. If you ever need to weld anything on the bike, disconnect the spark plug cap, unplug the ignition, disconnect the kill switch, scrape the paint bare near the area to be welded and put the ground clamp as close to the area to be welded as possible.

⚠ WARNING

Be sure the fuel tank and carburetor have been removed and safely located away from the welding process.

3. The frame is 4130 Chrome Moly and it is important to weld it with the proper rod and heat settings set as light as possible. Cobra recommends replacing the frame with a new one if the old one becomes damaged. Use ER70S6 filler if welding on the frame.

4. If your kick-starter lever does not return properly, first try loosening the six kick/clutch cover screws ½ turn. Hold the kick lever ½ way down while retightening the six screws starting for the center and working out.

5. Inspect CFD slip torque every 10 hours of riding or replace the friction papers and the load spring (Bellville spring) every 20 hours.

6. Check proper clutch engagement before and after each ride. If the clutch is engaging properly DO NOT feel the need to take the clutch apart to; measure the spring stack, clean the stack, replace the springs, etc... Cobra has worked real hard to make a clutch that is low maintenance and so only take it apart if it NEEDS to be maintained.

Replacing Transmission / Clutch Lubricant

Tools needed:

- 225 ml (7.6 oz) *Cobra Venom 3 Shoe Clutch Milk* (Part # MCMUGF01).
- 13 mm combination wrench

Procedure:

1. Begin this procedure with a bike that has been ridden more than 5 minutes but less than 10 minutes. It is desired to have the engine warm enough so that the oil is 'runny' but not so hot that there is risk of being burned by the engine or the oil.

⚠ WARNING

Hot oil and hot components on the motorcycle may cause burns.

2. Lean the bike against something or set on stand with oil drain hole.
3. Using a 13 mm wrench, remove the oil drain bolt located on the right side of the engine, on the clutch cover, near the brake lever (Item 2, figure 1).

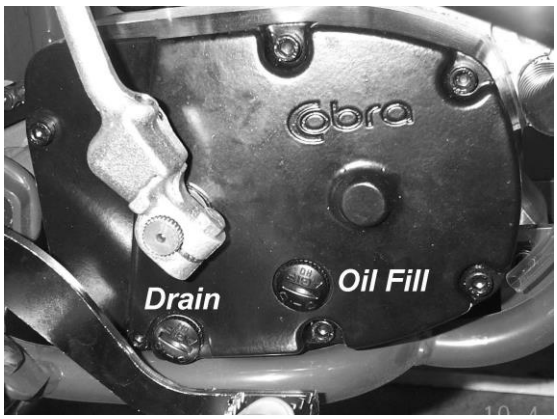

Figure 1

NOTE: You may need to adjust the brake pedal (up or down) to gain access to the drain bolt.

4. After it has drained, reinstall the bolt being sure that the gasket is in place. Torque to 15 Nm (11 ft-lb).
5. Reapply oil from oil fill plug 235 cc *Cobra Venom 3 Shoe Clutch Milk* thru the fill plug.

NOTE:
Putting additional oil, up to 12 oz (295 cc), can help clutch life. More than 12 oz (295 cc) will degrade engine performance.

NOTE:
Lean bike over onto it's left hand side so that the clutch cover is up unless you have a squeeze bottle.

6. Reapply the oil fill bolt, hand tight, being sure the gasket is in place.

CAUTION:
Cobra has spent considerable time and money developing the proper lubrication to handle the harsh environment of the automatic clutch and transmission of this motorcycle. Cobra's specially developed *Cobra Venom 3 Shoe Clutch Milk* (Part # MCMUGF01) was formulated to provide superior lubrication and cooling capability over extended periods of time and is the recommended lubricant for your Cobra motorcycle.

Proper Chain adjustment

Tools required for chain adjustment

- 19 mm wrench or socket
- 13 mm wrench or socket

1. Make sure that the rear wheel is aligned properly.
2. For proper adjustment, the chain should have 35 mm (1 3/8") free movement just behind the chain block with no load on the bike (figure 2)

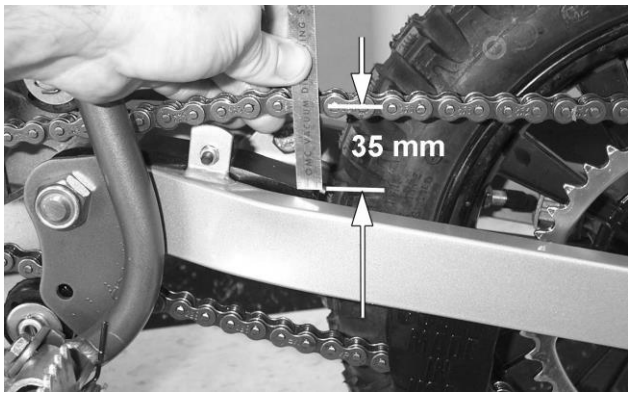

Figure 2

CAUTION:
Sit on the bike and verify that the chain has a minimum of 12mm (1/2") free movement when the chain is at it's tightest point.

3. If the chain requires adjusting, loosen the axle with a 19 mm wrench and tighten the chain by rotating the adjustor bolts clockwise (CW) or loosen the chain by rotating the adjustor bolts (CCW).
4. Retighten the axel bolt to 25 ft-lb (34 Nm).
5. Retighten the adjustor bolt

Figure 3

CAUTION:
Always check rear brake adjustment and free-play after adjusting the chain.

Air Filter Cleaning

Tools recommended for air filter maintenance:
- #2 Phillips head screwdriver
- 4 mm hex key (Allen)
- Foam filter oil

Procedure

1. Removed the seat with the 4 mm hex key
2. Remove the filter/air inlet boot from the back of the carburetor with a phillips screwdriver
3. Pull the filter / boot assembly back, up, and out the top of the airbox.
4. Clean the filter in a nonflammable solvent to remove the filter oil.

⚠ WARNING
Do not clean the air filter with gasoline or other highly volatile petroleum product. Diesel fuel or kerosene would be preferred but caution should still be taken. Hot soapy water works well.

5. Clean the filter in hot soapy water to remove all dirt particles.
6. Allow it to dry thoroughly.
7. Saturate with filter oil and remove excess.

NOTE:
The Cobra is equipped with a special designed Air box. It is very important to keep the air filter clean and properly oiled with high quality water-resistant foam filter oil. It's very important to oil your filter consistently each time because varied amounts of oil will change your carburetor jetting.

8. **Reinstall** the filter / boot assembly by pushing it down and forward into the

airbox making sure the letters “CM” are visible between the carburetor and airbox (figure 8).

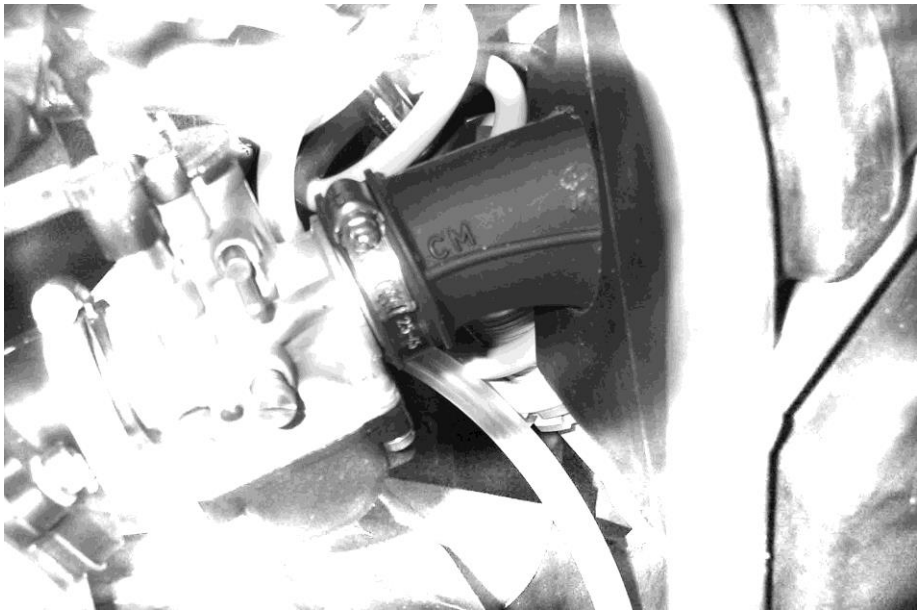

Figure 8

NOTE:
Make sure you change or clean your filter after each moto. We recommend carrying multiple filters in your toolbox, one for each practice session and moto.

Fork Oil Replacement

Tools required

- 5 & 6 mm Allen wrench
- 19 mm wrench or socket (two required)
- Spring clip remover

Disassembly

1. Remove the front wheel.
2. Remove the fork legs from the triple clamps.
3. Perform the following on one leg at a time.
4. Using your hands, remove the black rubber plug from the top of the fork leg exposing the white plastic cap.
5. Secure the fork leg assembly in a vice by gripping the leg across the flats through which the axle bolt goes through.
6. Depress the white plastic cap inwards (down) and remove the wire spring clip from its groove.
7. Remove the white cap, the fork spring preload sleeve, and the fork spring.

NOTE: Depressing the fork leg will facilitate removing the white cap.

8. The fork can now be turned upside down and drained.

Assembly

1. Fill the leg with 200 cc (6.8 oz) 20 wt fork oil.
2. Standard fork oil level is 70 mm (2.75”) from the top edge with the fork collapsed.

NOTE: Remove the preload sleeve but leave the spring in for the measurement.

3. Install the preload sleeve.
4. Install and depress the white cap while installing the spring clip.
5. Fork may be reinstalled.

Frictional Drive (CFD)

The Cobra Frictional Drive (CFD) is essentially a slip clutch that dissipates torque spikes transmitted from the rear wheel to the rest of the drive line and engine. Instead of these torque spikes potentially damaging internal components, the CFD allows the transmission to slip with respect to the engine. For this to occur, the CFD must function properly by ‘slipping’ between a minimum torque value, and a maximum torque value.

The slip torque of the CFD should be checked every 5 hours of operation.

Slip Torque	Ft-lb	N-m
Minimum	50	67
Maximum	125	169

With the clutch cover off, you can check the slip torque by ‘blocking’ the primary gear with a suitably strong device, or Cobra tool EAMU0004, and then rotate the blue CFD nut counter clock-wise with a torque wrench observing the reading when the nut (and shaft) turn.

If you do not have the capability of checking for proper slip torque, you should replace the friction papers and the load spring (Bellville spring) every 10 hours to ensure proper operation.

NOTE
To loosen and tighten the blue CFD nut, use a strong wooden object (large hammer handle) through the spokes of the rear wheel as a brace against the swingarm to stop transmission shaft rotation.

CAUTION:
The blue CFD nut has left hand threads which require clock-wise rotation to loosen.

Parts

Parts – Airbox and Inlet System

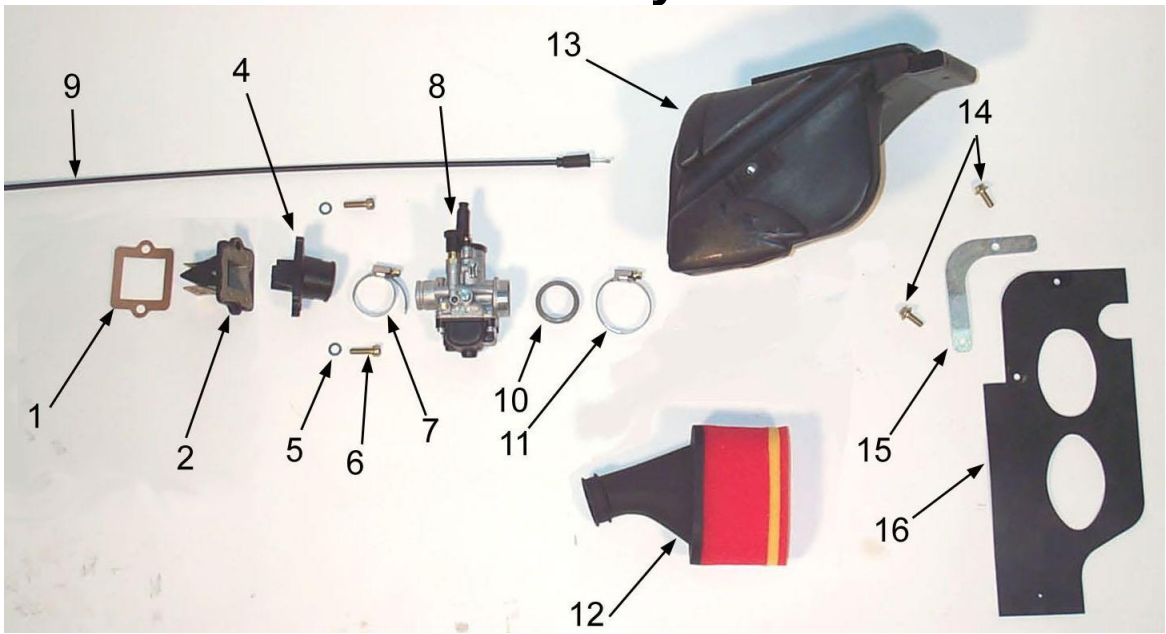

Figure 7

Airbox and Inlet System		
REF #	PART #	DESCRIPTION
1	ZCMU0132	GASKET – REED TO CYLINDER
2	ECKG0202	REED BLOCK ASSEMBLY
Not Shown	ECKG0205	REEDS REPLACEMENT
4	ECKG0203	INLET MANIFOLD
5	HCWF0601	6MM FLAT WASHER
6	HCBC0625	M6X25 SOCKET HEAD CAP SCREW
7	MCKGHO04	HOSE CLAMP – CARBURETOR TO MANIFOLD
8	RACM0002	CARBURETOR 14MM
Not Shown	FCMU0026	FUEL LINE 5”
Not Shown	MCMUCL04	HOSE CLAMPS – FUEL LINE
Not Shown	RCMU0022	VENT HOSE
9	FCMU0019	THROTTLE CABLE
10	RCCM1301	VELOCITY STACK
11	MCKGHO01	HOSE CLAMP – AIR BOOT TO CARBURETOR
12	RCMU0403	AIR FILTER WITH BOOT
13	RCMU0405	AIR BOX – CM
14	HCBB0612	M6X12 BUTTON HEAD BOLT (2 REQ’D)
15	RCMU1407	BRACKET – MUD FLAP
16	RCMU0406	MUD FLAP – CM

Parts – Bars and Controls

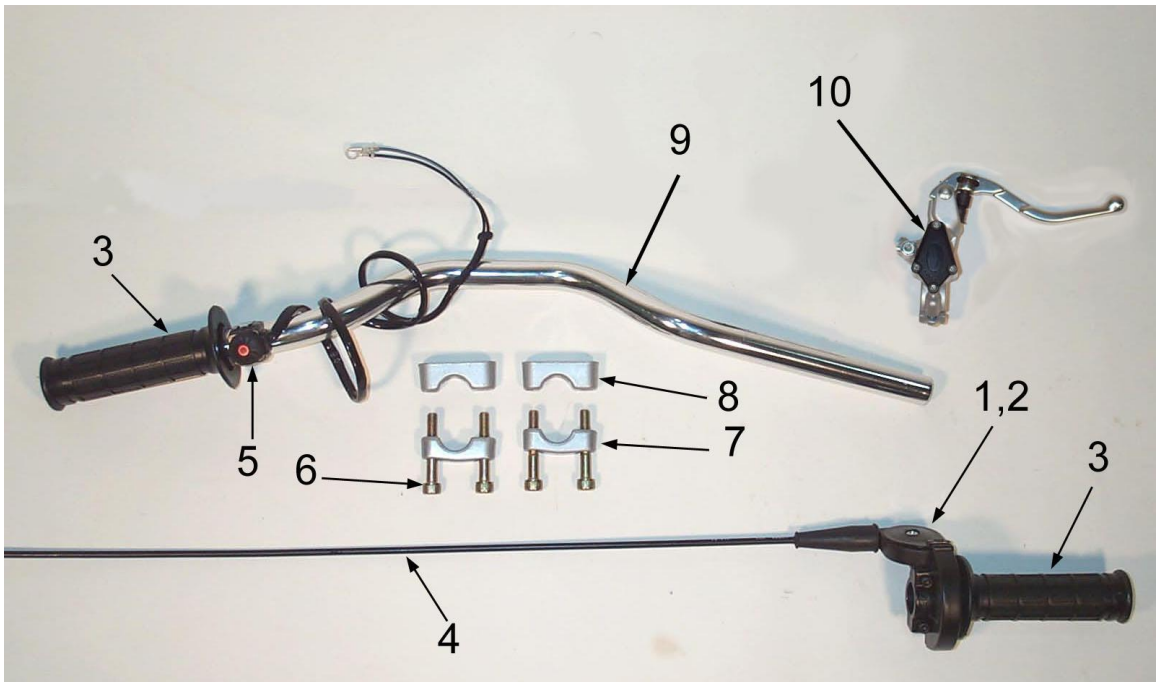

Figure 8

Bars and Controls		
REF #	PART #	DESCRIPTION
1	FCMU0066	THROTTLE ASSEMBLY
2	FCMU0068	THROTTLE COVER
3	TCMU0008	GRIPS (SET OF TWO)
4	FCMU0019	THROTTLE CABLE
5	FCMU0033	KILL SWITCH ASSEMBLY
6	KCMZ0001	M8X50 SOCKET HEAD CAP SCREW (4 REQ'D)
7	KCMZ0003	LOWER HANDLE BAR CLAMP (2 REQ'D)
8	KCMZ0002	TOP HANDLE BAR CLAMP (2 REQ'D)
9	TCMU0019	HANDLEBAR - ALUMINUM
10	BCKG0024	BRAKE PERCH ASSY W/LEVER & BALL
		FOR FRONT BRAKE ACCESSORIES SEE "FRONT BRAKE" SECTION

Parts - Carburetor

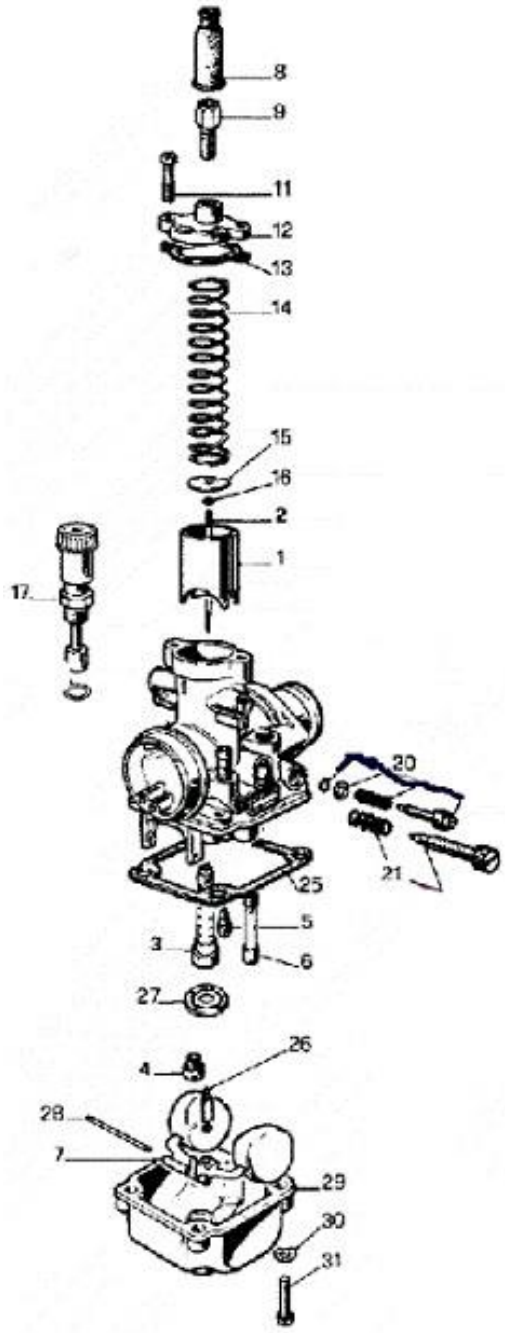

Carburetor		
REF. #	**PART #**	**DESCRIPTION**
	RCCM0001	COMPLETE CARBURETOR 14MM
1	RCMU0305	CARB SLIDE
2	RCMU0601	NEEDLE
3	RCMU00	ATOMIZER AU2.62
4	RCMU00xx	MAIN JET, xx denotes size
5	RCMU00xx	PILOT JET, xx denotes size
6		CHOKE JET
7	RCMU0301	FLOAT
8	RCMU0102	RUBBER CABLE CAP SEAL
9	RCMU0003	CABLE ADJUSTOR
11	RCMU0006	TOP CARB SCREW
12	RCMU0106	CARB TOP
13	ZCMU0007	TOP CARB GASKET
14	RCMU0004	SLIDE SPRING
15	RCMU0028	NEEDLE RETAINER PLATE
16	RCMU0007	NEEDLE CLIP
17	RCMU0204	CHOKE ASS'Y. 2001 CM
20	RCMU0009	FUEL MIXTURE SCREW
21	RCMU0011	IDLE ADJUSTMENT SCREW
25	RCMU0103	FLOAT BOWL GASKET
26	RCMU0107	FLOAT NEEDLE
27	RCMU0012	DIFFUSER
28	RCMU0016	FLOAT RETAINER PIN
29	RCMU0108	FLOAT BOWL
30	HCWF0401	WASHER 4MM FLAT
31	RCMU0201	SCREW FLOAT BOWL
Not Shown	RCCM1301	VELOCITY STACK – 05 style
	RCCM0314	14MM CARB RESTRICTOR
Not Shown	FCMU0026	FUEL LINE 5"
Not Shown	MCMUCL04	HOSE CLAMPS – FUEL LINE
Not Shown	RCMU0022	CARB VENT HOSE 2" EACH

Figure 9

Parts – Coolant System

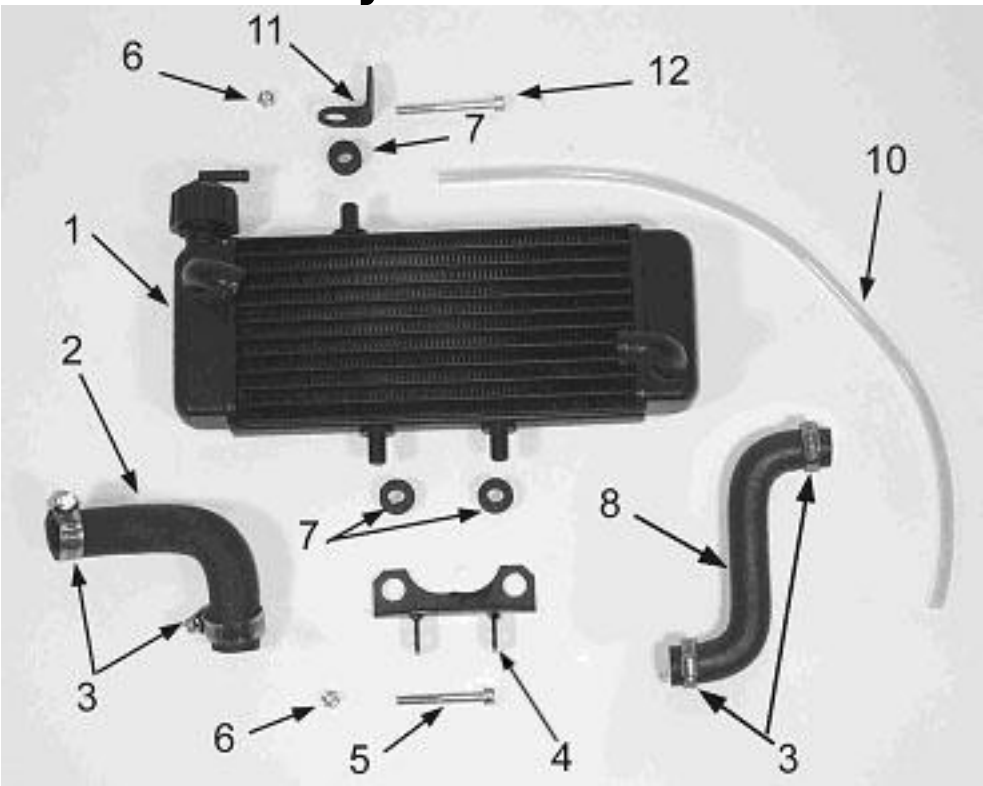

Figure 10

Coolant System		
REF #	PART #	DESCRIPTION
1	ECMU0061	RADIATOR WITH CAP
2	MCMUHO02	RADIATOR HOSE LEFT
3	MCMUCL07	HOSE CLAMP
4	ECHA0003	MOUNTING BRACKET – RADIATOR BOTTOM
5	HCBC0607	M6X50 SOCKET HEAD CAP SCREW
6	HCNL0601	6MM LOCK NUT
7	MCKGGR00	GROMMET – RADIATOR MOUNTING
8	MCCMHO01	RADIATOR HOSE RIGHT
10	FCMU0049	OVERFLOW HOSE – 20”
NOT SHOWN	MCMUCL05	HOSE CLAMP FOR OVERFLOW HOSE
11	ECHA0109	MOUNTING BRACKET – RADIATOR TOP
12	HCBC0660	M6X60 SOCKET HEAD CAP SCREW

Parts – Electrical System

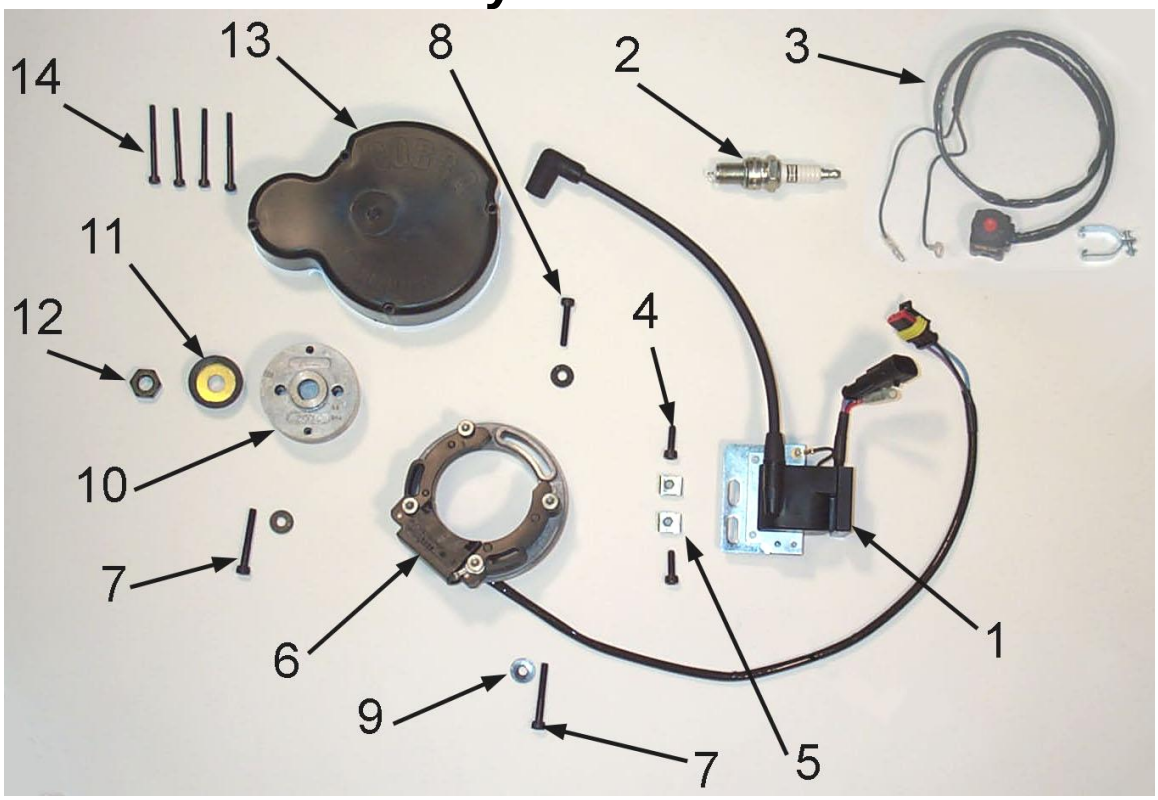

Figure 6

Electrical System		
REF #	PART #	DESCRIPTION
1	IAMU0005	COIL W/SPARK PLUG CAP
2	ECMU0065	SPARK PLUG, CHAMPION (8339-1)
2H	ECMU0067	OPTIONAL HOTTER PLUG (8332-1)
2C	ECMU0066	OPTIONAL COLDER PLUG (8904-1)
3	FCMU0033	KILL SWITCH ASSEMBLY
4	HCBC0516	SCREW, M5 X 16 (2 PER)
5	HCCN0000	5MM CLIP NUT (2 PER)
6	ICMU0018	STATOR WITH GROMMET
7	HCBC0535	5mm x 35 SOCKET HEAD CAP SCREW (2 REQ'D)
8	HCBC0525	5mm x 25 SOCKET HEAD CAP SCREW
9	HCWF0504	WASHER FOR STATOR (3 PER)
10	ICMU0006	ROTOR
NOT SHOWN	ICMU0012	WOODRUFF KEY
11	ECKG0042	PULLEY, WATERPUMP CRANK
12	HCNS1001	NUT 10MM
13	ECKG0001	IGNITION COVER
14	HCBC0445	M4 X 45 SOCKET HEAD CAP SCREW (4 REQ'D)
NOT SHOWN	ZCKG0101	GASKET – IGNITION COVER

Parts – Engine – Bottom End and Transmission

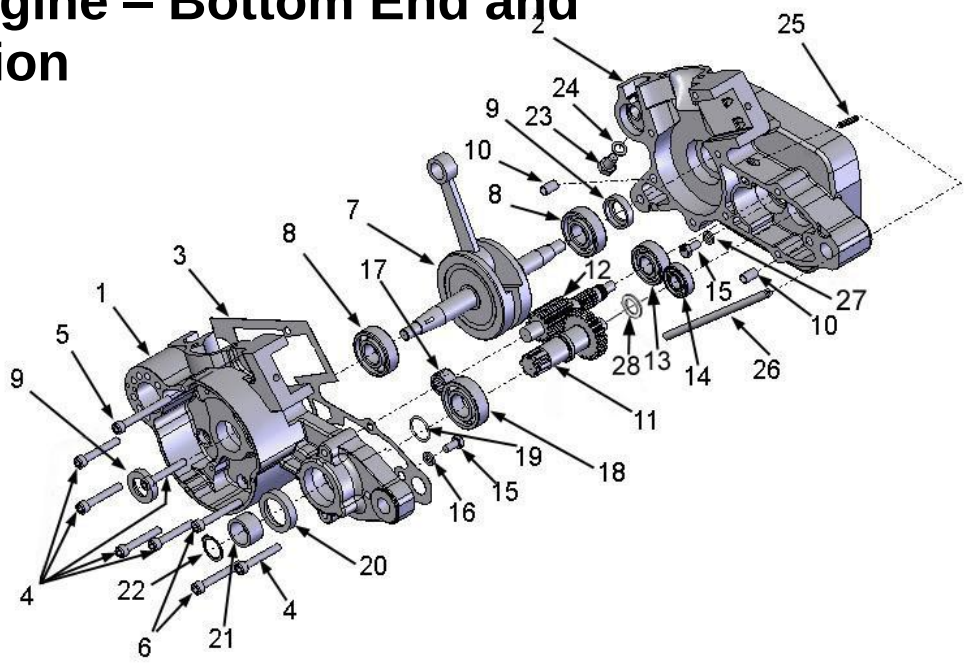

Figure 7A

Engine Bottom End and Transmission		
REF #	PART #	DESCRIPTION
1	EKMU0023	ENGINE CASE SET W/B&S 50 07
2	EKMU0023	ENGINE CASE SET W/B&S 50 07
3	ZCMU0601	GASKET, CRANKCASE CENTER
4	HCBC0605	6X40MM SOCKET HEAD CAP SCREW (6 REQ'D)
5	HCBC0608	6X55MM SOCKET HEAD CAP SCREW (1 REQ'D)
6	HCBC0606	6X45MM SOCKET HEAD CAP SCREW (2 REQ'D)
7	ECMU0038	CRANKSHAFT
8	ECMU0016	BEARING, CRANKSHAFT
9	ECMU0118	SEAL, CRANKSHAFT
10	ECDC0031	DOWEL, ENGINE CASE ALIGNEMENT (2 REQ'D)
11	ECMU0099	OUTPUT SHAFT, TRANSMISSION WITH GEAR
12	ECMU0100	SECONDARY SHAFT, TRANSMISSION WITH GEAR
13	ECMU0001	BEARING, TRANMISSION SECONDARY SHAFT
14	ECKG0031	BEARING OUTPUT SHAFT, RIGHT SIDE
15	HCBH0612	M6X12 HEX HEAD SCREW - BEARING RETAINER (2 PLACES)
16	HCWL0601	6MM LOCK WASHER
17	ECMU0020L	BEARING, TRANSMISSION PRECISION
18	ECKGBR01	BEARING, TRANSMISSION OUTPUT SHAFT
19	ZCDCOR01	O-RING, SPROCKET SPACER
20	ECMU0072	SEAL, OUTPUT SHAFT
21	ECMU0073	SPACER, SPROCKET
22	ECKGSR03	SNAP RING, SPROCKET
NOT SHOWN	PCKG0014	SPROCKET, 14 T
23	HCBH0805	M8X12 SCREW – COOLANT DRAIN
24	HCWC0000	COPPER GASKET
25	ECMU0533	FITTING, CRANKCASE VENT
26	RCMU0021	VENT HOSE, CRANKCASE, 9"
27	HCWF0316	WASHER – FLAT
28	ECMU0156	SHIM – OUTPUT SHAFT 50'S

Parts – Engine Clutch and Kicker

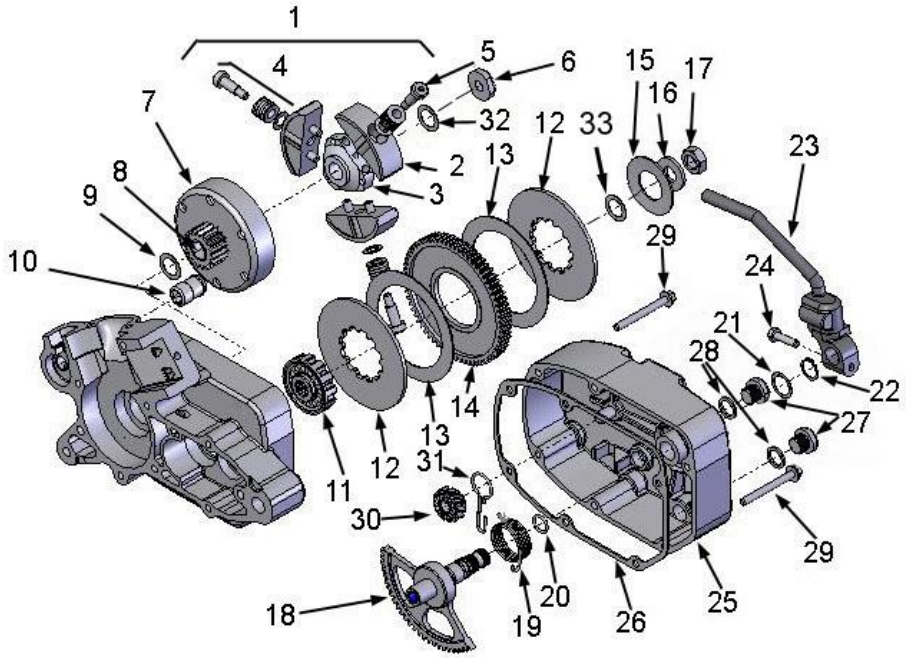

Figure 7B

Engine – Clutch and Kick Starter		
REF #	PART #	DESCRIPTION
1	CAMU0005	CLUTCH COMPLETE
2	CAMU0013	CLUTCH SHOES (SET OF 3) WITH BOLT & WASHERS
3	CCMU0029	CLUTCH ARBOR
4	CAMU0010	SPRINGS, WASHER & BOLT (SET OF 3)
5	HCBS0004	CLUTCH BOLT (3 REQ'D)
6	ECMU0018	CLUTCH NUT, SPECIAL
7	ECMU0120	CLUTCH BASKET WITH NEEDLE BEARING
8	ECMU0119	CLUTCH BEARING
9	ECMU0040	CLUTCH TO HUB SPACER (0.030", 0.76MM)
	ECMU0040T	CLUTCH TO HUB SPACER (THIN – 0.015", 0.38MM)
10	ECMU0132	COOLANT FITTING
11	ECMU0141*	HUB, CFD*
12	ECMU0142*	PLATE, CFD (2 REQ'D)*
13	ECMU0143	PAPER, CFD (2 REQ'D)
14	ECMU0161	GEAR, CFD
15	ECMU0145*	SPRING WASHER, CFD*
16	HCWF0002*	WASHER FLAT, CFD (13MM)*
17	HCNS1202	NUT, CFD (½-20 LEFT HAND THREAD – BLUE)
18	EAMU0001	KICKSTART GEAR & SHAFT
19	ECMU0116	SPRING, KICKSTART
20	ZCMUB014	O-RING KICK SHAFT
21	HCWS1622	SHIM, KICK SHAFT
22	ECDC0036	SNAP RING, KICK SHAFT
23	ECDC0046	KICK LEVER W/BOLT
24	HCBF0620	6MM X 20 FLANGE HEAD BOLT
25	ECMU0115	CLUTCH COVER
26	ZCMU0030	CLUTCH COVER GASKET
27	ECMU0037	OIL FILL PLUG
28	ZCMU0005	GASKET, OIL FILL / DRAIN PLUG
29	HCBC0608	6MM X 55 SOCKET HEAD CAP SCREW (6 REQ'D)
30	ECMU0207	KICKSTART GEAR SMALL
31	ECMUSP01	KICK START DOG SPRING (PAPER CLIP)
32	HCWS0802	WASHER – KICK GEAR SPACING
33	ECMU0134*	SHIM – CFD*
(*) denotes an obsolete part. If this part is required, CFD 08 upgrade kit is required EKMU0005		

Parts – Engine – Water Pump

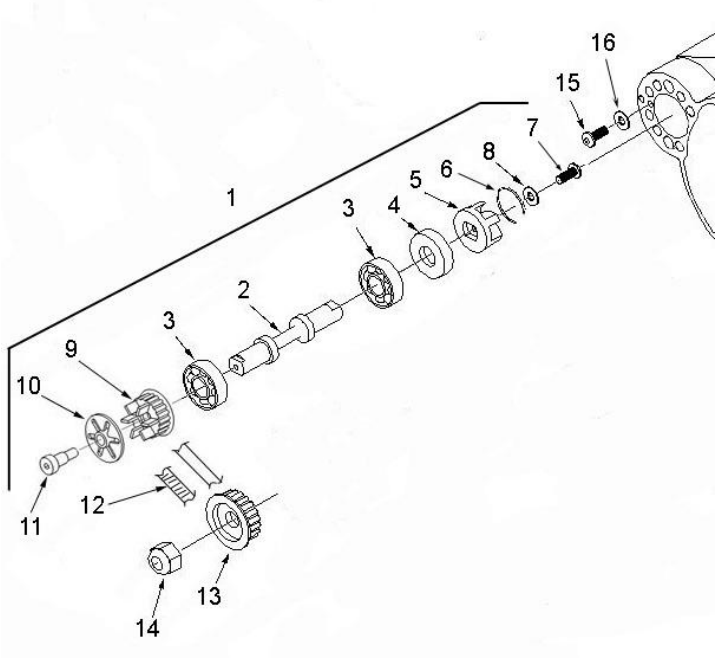

Figure 7C

Engine – Ignition and Water Pump		
REF #	PART #	DESCRIPTION
1	EKMU0001	WATER PUMP KIT
2	ECKG0142	SHAFT, WATER PUMP
3	ECKG0072	BEARING, WATER PUMP
4	ECKG0074	SEAL, WATER PUMP SHAFT
5	ECKG0073	IMPELLER, WATER PUMP
6	ECKG0004	RETAINER, WATER PUMP ASSEMBLY
7	HCBB0003	5MM X 12 BUTTON HEAD STAINLESS
8	HCWF0501	FLAT WASHER
9	ECKG0175	WATER PUMP PULLEY, FAN TYPE - DRIVEN
10	ECMU0180	BELT RETAINER
11	HCBS0003	SHOULDER BOLT 6MM
12	ECKG0170	WATER PUMP BELT
13	ECKG0042	WATER PUMP PULLEY, CRANK
14	HCNS1001	NUT 10MM
15	HCBC0408	M4mm x 8 SOCKET HEAD black oxide
16	HCWF0401	4MM WASHER

Parts – Engine – Top End

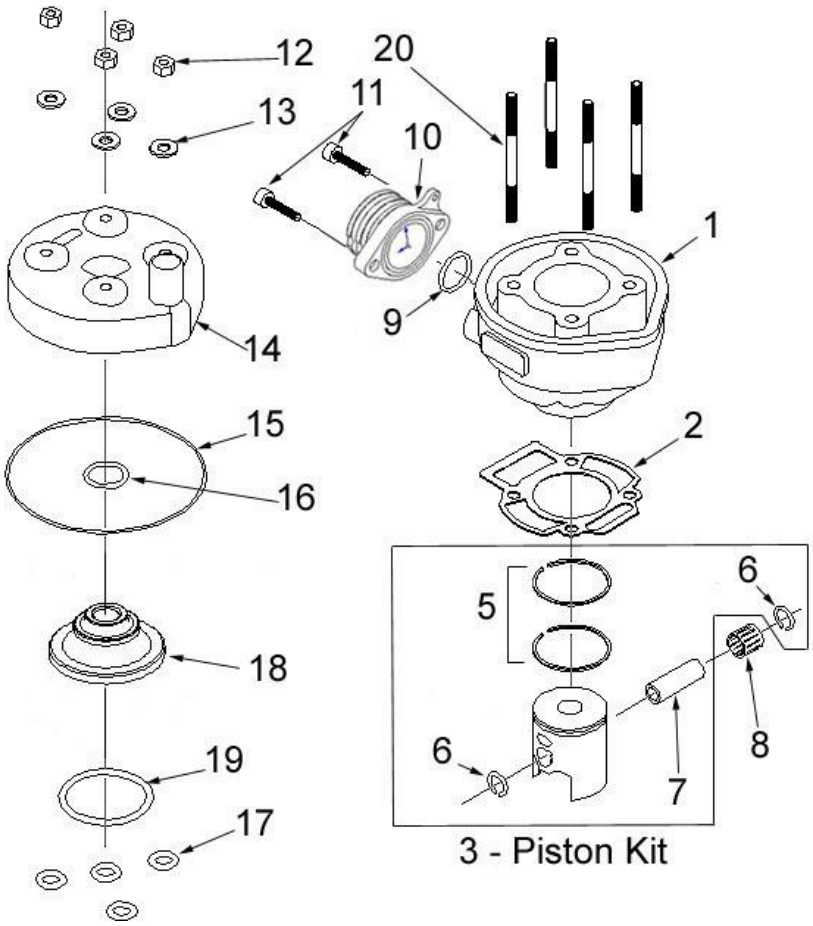

Figure 7D

Engine – Top End		
REF #	PART #	DESCRIPTION
1	ECMU0052	CYLINDER
2	ZCKG0501	BASE GASKET 0.015” (0.4mm thick) For other Base Gaskets refer to **Base Gasket Selection** section of this manual
3	ECMU0060	PISTON KIT
5	ECMU0155	PISTON RINGS (2 PER SET)
6	ECMUSR00	SNAP RING FOR PISTON (2 REQ'D)
7	ECKG0012	WRIST PIN
8	ECMU0077	BEARING, WRIST PIN
9	ZCMUOR07	O-RING, EXHAUST FLANGE
10	ECMU0086	EXHAUST FLANGE
NOT SHOWN	ZCMOTE11	O-RINGS – PIPE TO FLANGE (2 REQ’D)
11	HCBC0612	M6X12, EXHAUST FLANGE SCREW (2 REQ'D)
12	HCNS0601	6mm Nut
13	HCWS1401	HARDENED WASHER
14	ECMU0530	CYLINDER HEAD OUTER
15	ZCMUOR02	O-RING, CYLINDER HEAD LARGE
16	ZCMUV024	O-RING CYLINDER HEAD SMALL
17	ZCMUOR10	O-RING CYLINDER STUD (4 REQ'D)
18	ECMU0532	CYLINDER HEAD, INSERT
19	ZCMUV032	O-RING CYLINDER HEAD MEDIUM
20	ECMU0075	STUD, CYLINDER 6mm

Parts – Exhaust System

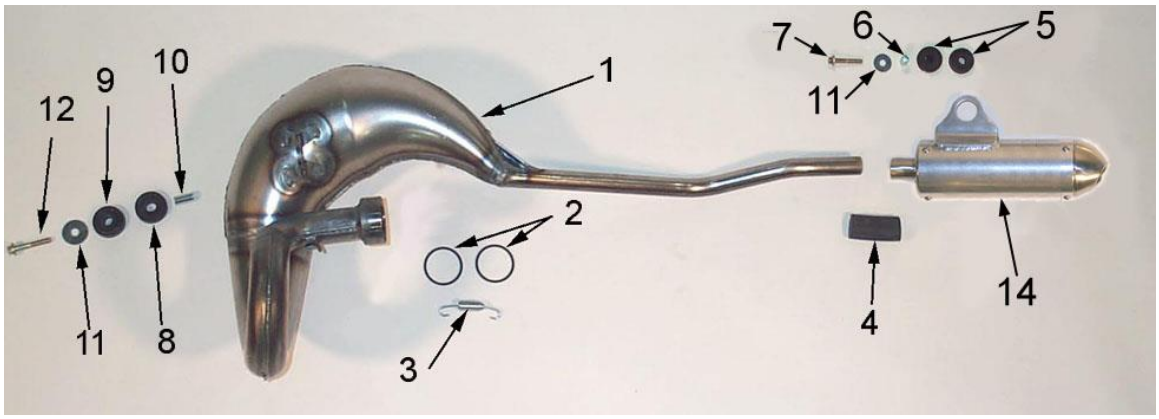

Figure 8

Exhaust System		
REF #	PART #	DESCRIPTION
1	XCCM2004	CX50 OI EXHAUST PIPE
2	ZCMOTE11	O-RING – EXHAUST (2 REQ'D)
3	XCMU0005	SPRING – EXHAUST SHORT
4	XCMU0028	PIPE / SILENCER SEAL
5	MCMUGR03	MOUNTING GROMMET (2 REQ'D)
6	TCKG0001	SPACER
7	HCBF0625	M6X25 FLANGE HEAD BOLT
8	MCMUGR06	PIPE GROMMET MALE
9	MCMUGR07	PIPE GROMMET FEMALE
10	MCMUSP02	PIPE GROMMET SPACER
NOT SHOWN	MCMUGR02	GROMMET KIT
11	HCWF1478	PIPE GROMMET WASHER
12	HCBF0635	M6X35 FLANGE HEAD BOLT
13	ECPW0001	Exhaust Power Regulator
14	XCMU0031	SILENCER
NOT SHOWN	XCMU0027	SILENCER PACKING KIT
NOT SHOWN	HCBB0408	M4 X 8 SILENCER SCREW

Parts – Forks & Triple Clamps

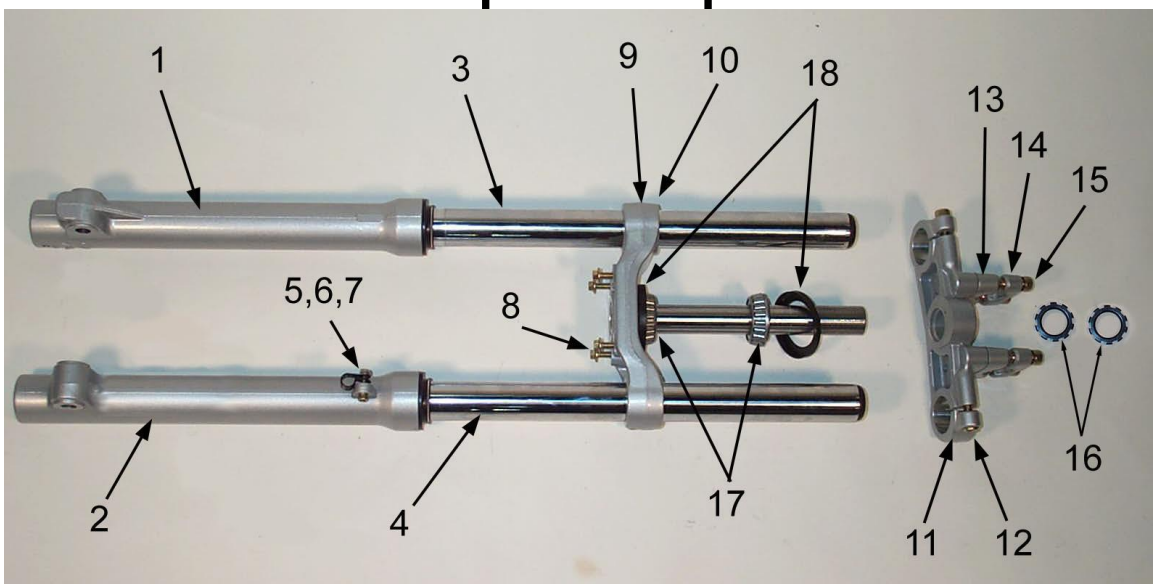

Figure 9

Front Forks and Triple Clamp		
REF #	PART #	DESCRIPTION
1	KCMZ0029	OUTER FORK LEG – RIGHT (NON BRAKE) SIDE
NOT SHOWN	KCMZ0131	OUTER FORK LEG ASSY – RIGHT WITH SEAL & SWIPER
NOT SHOWN	KACM005R	FORK LEG COMPLETE – RIGHT SIDE
2	KCMZ0006	OUTER FORK LEG – LEFT (BRAKE) SIDE for Disc
NOT SHOWN	KCMZ0010	OUTER FORK LEG ASSY – LEFT WITH SEAL & SWIPER for Disc
NOT SHOWN	KACM0007L	FORK LEG COMPLETE – LEFT SIDE for Disc
3	KCMZ0026	INNER FORK LEG – RIGHT (COMPRESSION) SIDE
4	KCMZ0027	INNER FORK LEG – LEFT (REBOUND) SIDE
5	HCCC0001	CLAMP – BRAKE CABLE
6	HCBC0502	M5X20 SOCKET HEAD CAP SCREW
7	HCNL0501	5MM LOCK NUT
8	HCBF0616	FENDER BOLT, M6X16 FLANGE HEAD (4 REQ'D)
9	KCMZ0025	TRIPLE CLAMP – LOWER WITH STEM
10	HCBC0625	M6X25 SOCKET HEAD CAP SCREW (4 REQ'D)
11	KCMZ0005	TRIPLE CLAMP – UPPER (NO BAR MOUNTS)
12	HCBC0806	M8X30 SOCKET HEAD CAP SCREW (2 REQ'D)
13	KCMZ0003	BAR MOUNT – LOWER (2 REQ'D)
14	KCMZ0002	BAR MOUNT – UPPER (2 REQ'D)
15	KCMZ0001	M8X50 SOCKET HEAD CAP SCREW
16	HCNJ0102	STEERING HEAD JAM NUT (2 REQ'D)
17	FCMU0004	STEERING HEAD BEARING (2 REQ'D)
18	FCMU1103	DUST COVER (2 REQ'D)

Parts – Forks – Leg Assembly

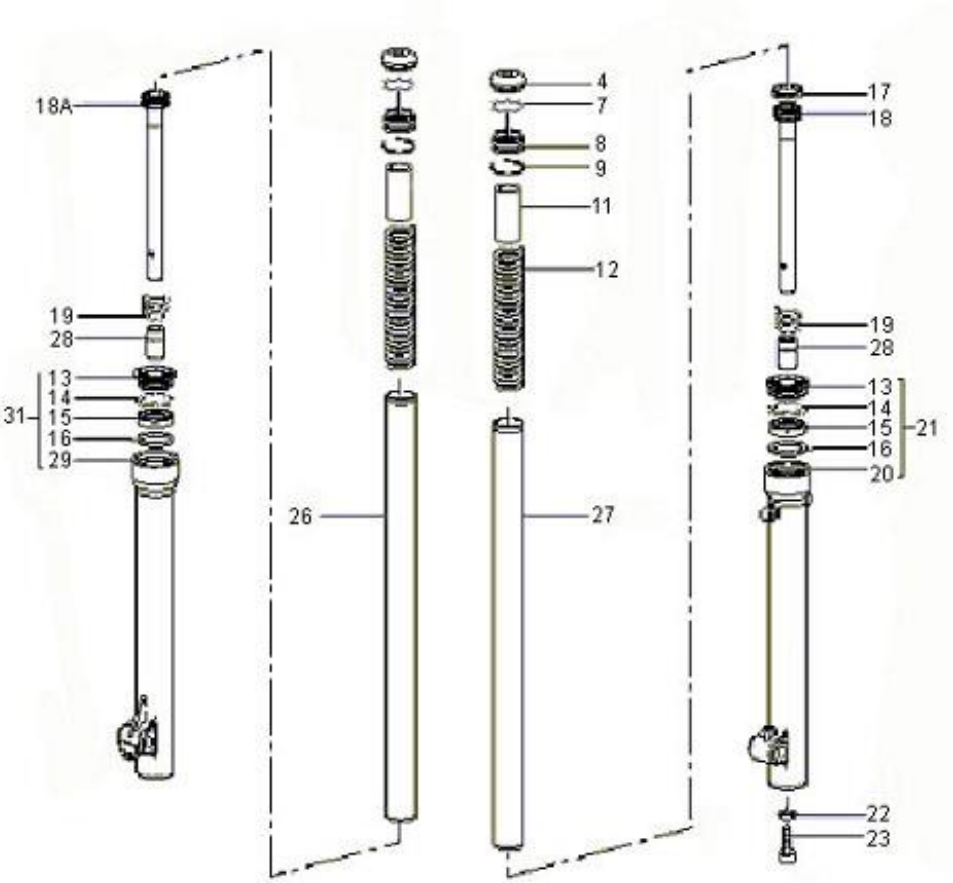

Figure 10

REF #	PART #	DESCRIPTION
4	KCMZ0004	FORK PLUG – BLACK
7	KCMZ0007	SNAP RING FOR FORK CAP
8	KCMZ0008	INNER FORK CAP - WHITE
9	KCMZ0009	O-RING UNDER FORK CAP
11	KCMZ0111	PRELOAD SLEEVE
12	KCMZ0012	FORK SPRING
13	KKCS0004	FORK SEAL & SWIPER KIT
14	KCMZ0014	SNAP RING
15	KCCS0004	FORK SEAL & SWIPER KIT
16	KCMZ0016	WASHER
17	KCMZ0017	SEALING RING FOR REBOUND PISTON
18	KCMZ0118	PISTON ROD - REBOUND
18A	KCMZ0118A	PISTON ROD - COMPRESSION
19	KCMZ0019	REBOUND SPRING
20	KCMZ0006	FORK LEG OUTER LEFT
21	KCMZ0010	FORK LEG – 5 PIECE UNIT – LEFT
22	HCWC0000	WASHER
23	HCBC0806	8 X 30 CS
26	KCMZ0026	FORK TUBE – INNER RIGHT
27	KCMZ0027	FORK TUBE – INNER LEFT
28	KCMZ0028	TOP OUT BUMPER
29	KCMZ0029	FORK LEG – OUTER RIGHT
31	KCMZ0031	FORK LEG – 5 PIECE UNIT – RIGHT
32	HCBC0609	6 X 20 CS

Parts – Frame – Mounting Hardware I

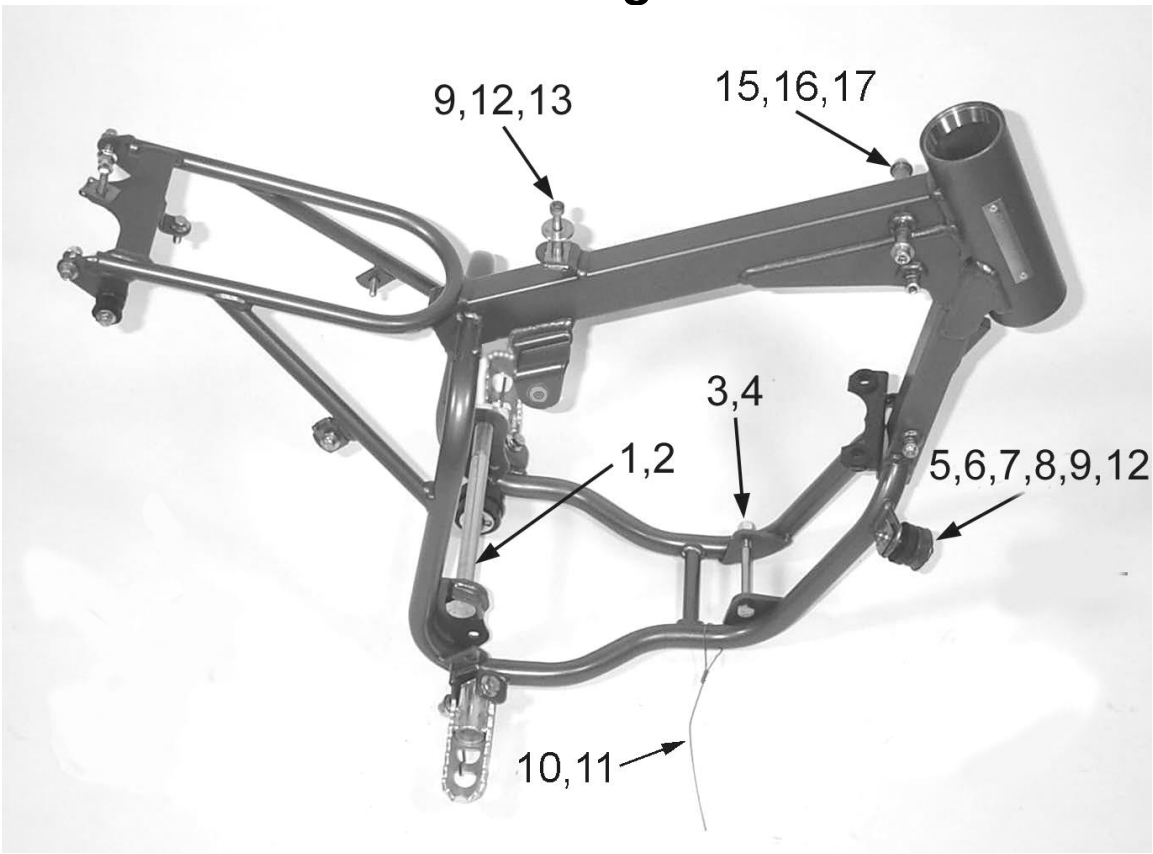

Figure 11

Frame – Engine, Tank, and Pipe Mounts, Brake Snake		
REF #	PART #	DESCRIPTION
	FAMU0004	FRAME 2007 CX50 JR
1	HCBH1403	SWINGARM BOLT
2	HCNL1402	SWINGARM LOCK NUT (M14X1)
3	HCBH0880	M8X80 SOCKET HEAD CAP SCREW
4	HCNL0801	8MM LOCKNUT
5	MCMUGR06	PIPE GROMMET MALE
6	MCMUGR07	PIPE GROMMET FEMALE
7	MCMUSP02	PIPE GROMMET SPACER
8	HCWF1478	PIPE GROMMET WASHER
9	HCHA0003	6MM CLIPNUT
10	BCMU0008	CABLE – BRAKE SNAKE
11	BCMU0009	CRIMP – BRAKE SNAKE
12	HCBF0635	M6X35 FLANGE HEAD BOLT
13	TCHA0004	BUSHING – REAR TANK MOUNTING
15	HCNL0601	6MM LOCKNUT
16	TCHA0006	BUSHING – FRONT TANK MOUNT (2 REQ'D)
17	HCBF0685	M6X85 SHCS

Parts – Frame – Mounting Hardware II

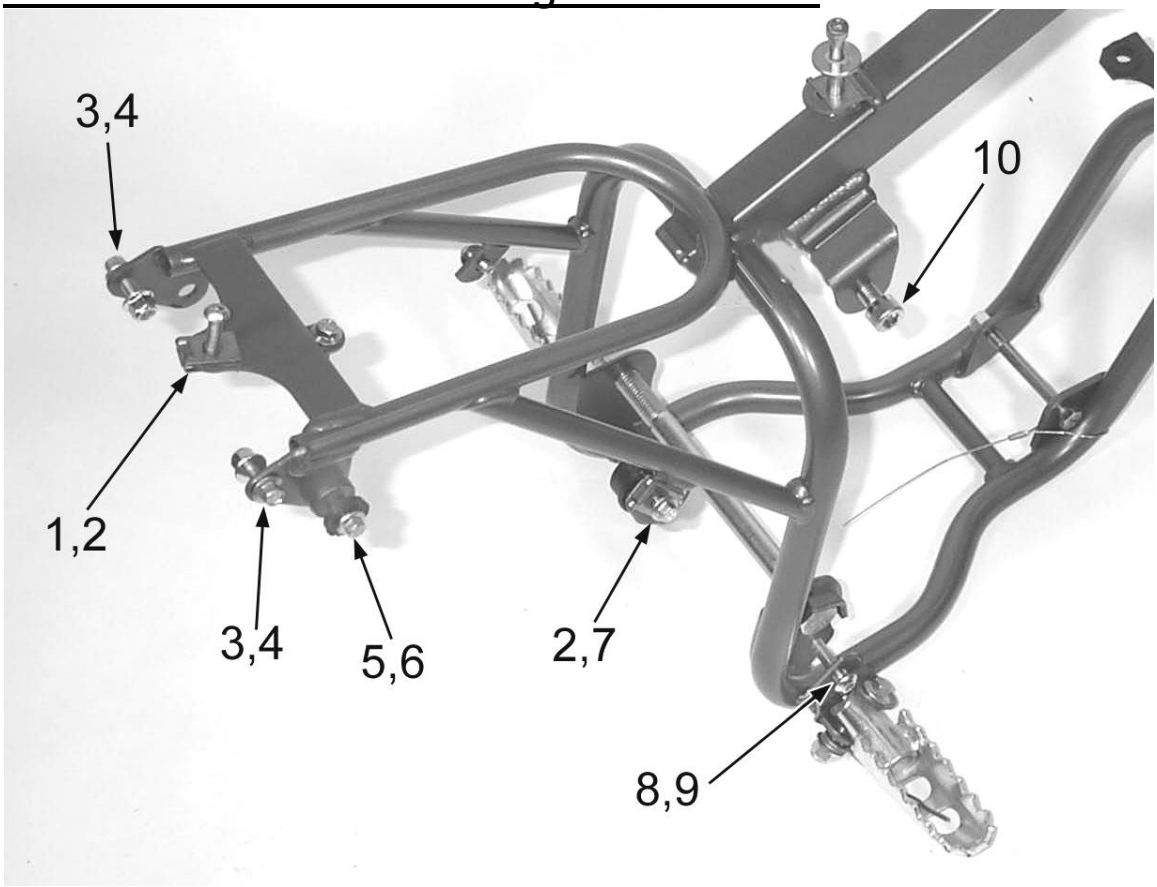

Figure 12

Frame – Seat, Fender, Right Side Panel, Brake Pedal, Silencer & Shock Mounts		
REF #	PART #	DESCRIPTION
	FAMU0004	FRAME 2007CX50 JR
1	HCBB0635	M6X35 BUTTON HEAD CAP SCREW
2	HCHA0003	6MM CLIPNUT
3	HCBF0620	M6X20 FLANGE HEAD BOLT
4	HCNF0602	6MM NYLOC FLANGE NUT
5	HCBF0625	M6X25 FLANGE HEAD BOLT
6	MCMUGR03	GROMMET – SILENCER (2 REQ'D)
NOT SHOWN	TCKG0001	SPACER FOR EXHAUST GROMMETS
NOT SHOWN	HCWF1478	WASHER – EXHAUST GROMMET
7	HCBF0616	M6X16 FLANGE HEAD BOLT
8	HCBH0840	M8 X 40MM FOOTPEG BOLT
9	HCNL0801	8MM LOCK NUT
10	HCBF1040	M10X40 FLANGE HEAD BOLT

Parts - Frame – Mounting Hardware III

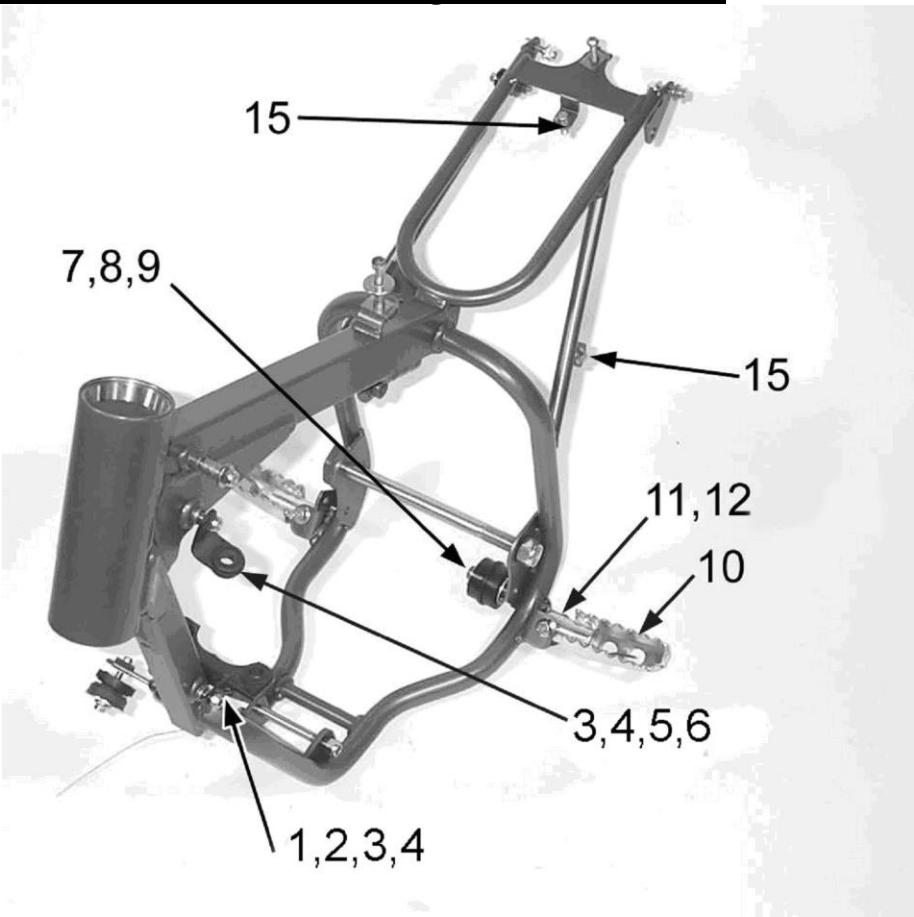

Figure 13

Frame – Radiator, Footpeg, Chain Roller, and Airbox Mounts		
REF #	PART #	DESCRIPTION
	FAMU0004	FRAME 2007 CX50 JR
1	ECHA0003	MOUNTING BRACKET – RADIATOR BOTTOM
2	HCBC0607	M6X50 SOCKET HEAD CAP SCREW
3	HCNL0601	6MM LOCK NUT
4	MCKGGR00	GROMMET – RADIATOR MOUNT (2 REQ'D ON BOTTOM, 1 ON TOP BRACKET)
5	ECHA0109	MOUNTING BRACKET – RADIATOR TOP
6	HCBC0660	M6X60 SOCKET HEAD CAP SCREW
7	FCMU0057	CHAIN ROLLER
8	HCWF1201	WASHER FLAT, CHAIN ROLLER (2 REQ'D)
9	HCCP0002	COTTERPIN 3/32 X 1 (2 REQ'D)
10	TCMU0010	WIDE FOOTPEGS (PAIR) KING STYLE
11	TCMU0106	FOOTPEG SPRING (SINGLE PIECE)
12	HCBF0840	M8 X 40MM FLANGE HEAD BOLT
12	HCWF0801	8MM FLAT WASHER
12	HCNL0801	8MM LOCKNUT
15	HCBF0616	M6X16 FLANGE HEAD BOLT

Parts – Front Brakes

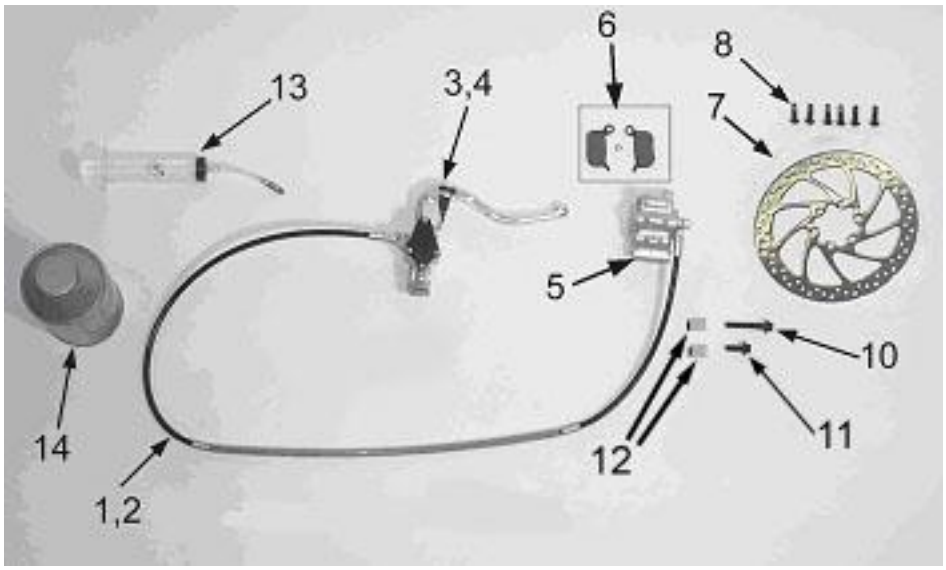

Figure 14

Front Brakes		
REF #	PART #	DESCRIPTION
1	BAKG0003	FRONT BRAKE ASSEMBLY
2	BCKG0030	HOSE – BRAKE FRONT
3	BCKG0023	ALLOY BRAKE LEVER
4	BCKG0024	BRAKE PERCH & MASTER CYLINDER ASSY W/ LEVER
5	BCKG0029	CALIPER – FRONT
6	BKKG0001	BRAKE PADS, WITH “E” CLIP
7	BCMU0503	BRAKE ROTOR
8	HCBC2512	M5X12 SOCKET HEAD CAP SCREW WITH THREAD LOC
9	FCKG0213	GUIDE – FRONT BRAKE LINE
10	HCBF0650	M6 X 50 SOCKET HEAD CAP SCREW
11	HCBF0630	M6 X 30 SOCKET HEAD CAP SCREW
12	BCCM0001	SPACER – CALIPER MOUNTING (2 REQ’D)
13	BCKG0031	BLEED KIT (MULTIPLE SYRINGES, FITTINGS & HOSE)
14		BRAKE FLUID
ACCESSORY	BCKG0028	LEVER ADJUSTMENT KIT
ACCESSORY	BCKG0027	RESERVOIR SEAL KIT
ACCESSORY	BCKG0025	REPLACEMENT BAR CLAMP AND SCREWS (FOR MASTER CYLINDER)
ACCESSORY	BCKG0026	PISTON & REBUILD KIT FOR MASTER CYLINDER
ACCESSORY	BCKG0014	FITTING KIT (BANJO BOLT, SMALL O-RING & SET SCREW)
ACCESSORY	BCKG0015	CALIPER PISTONS & SEALS
ACCESSORY	BCKG0019	RETURN SPRING (4 FINGER SPRING)

Parts – Front Wheel

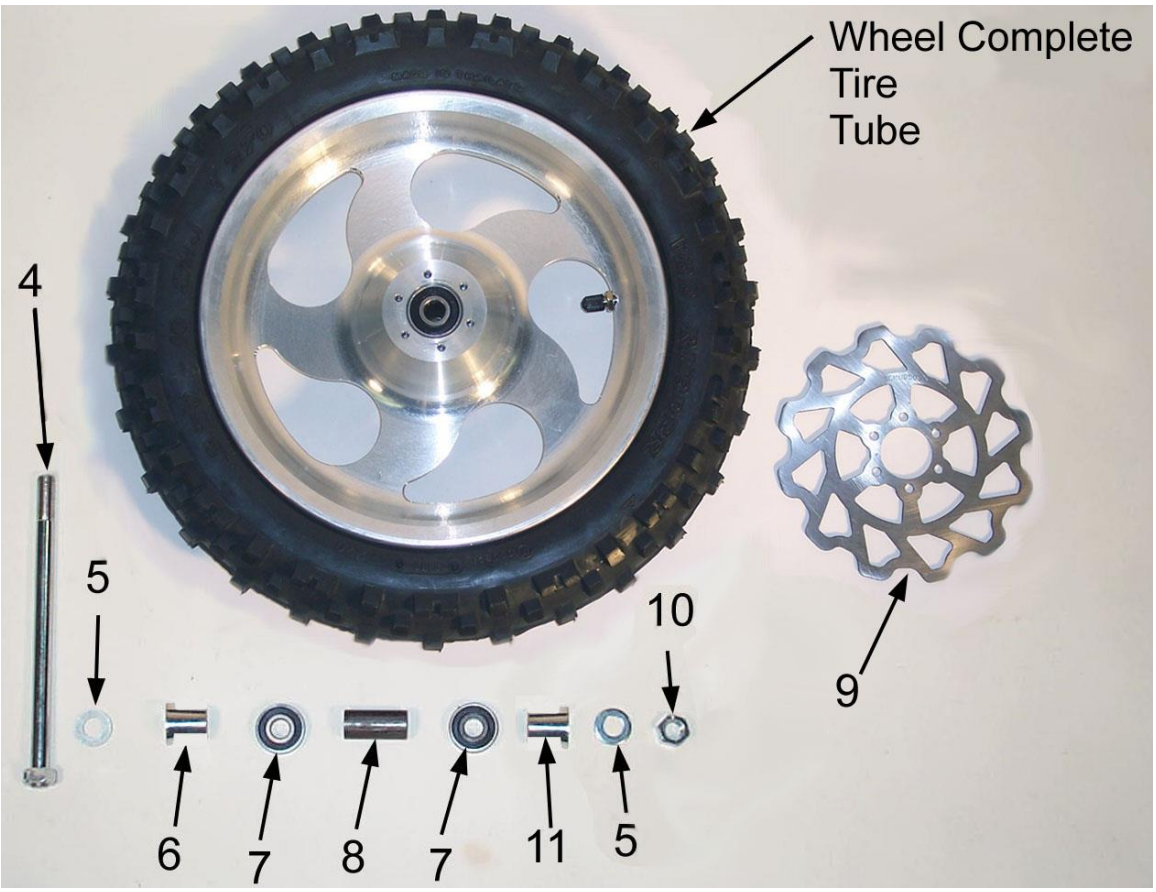

Figure 15

Front Wheel		
REF #	PART #	DESCRIPTION
1	WAKG0001	WHEEL WITH BEARINGS (NO TIRE & TUBE)
2	WCMU0250	FRONT TIRE 10X2.50”
3	WCMUTU10	TUBE 10”
4	WCMU0014	FRONT AXLE
5	HCWF1202	WASHER – AXLE
6	WCCM0001	WHEEL SPACER LEFT (SHORT)
7	WCMU0020	BEARING – WHEEL (2 REQ’D)
8	WCMU0004	SPACER – WHEEL FRONT
9	BCMU0503	BRAKE ROTOR – FRONT
NOT SHOWN	HCBC2512	5X12MM SHCS WITH THREAD LOCK (6 REQ’D)
10	HCNL1201	LOCK NUT – AXLE
11	WCCM0002	WHEEL SPACER RIGHT (LONG)

Parts – Plastic Bodywork & Seat

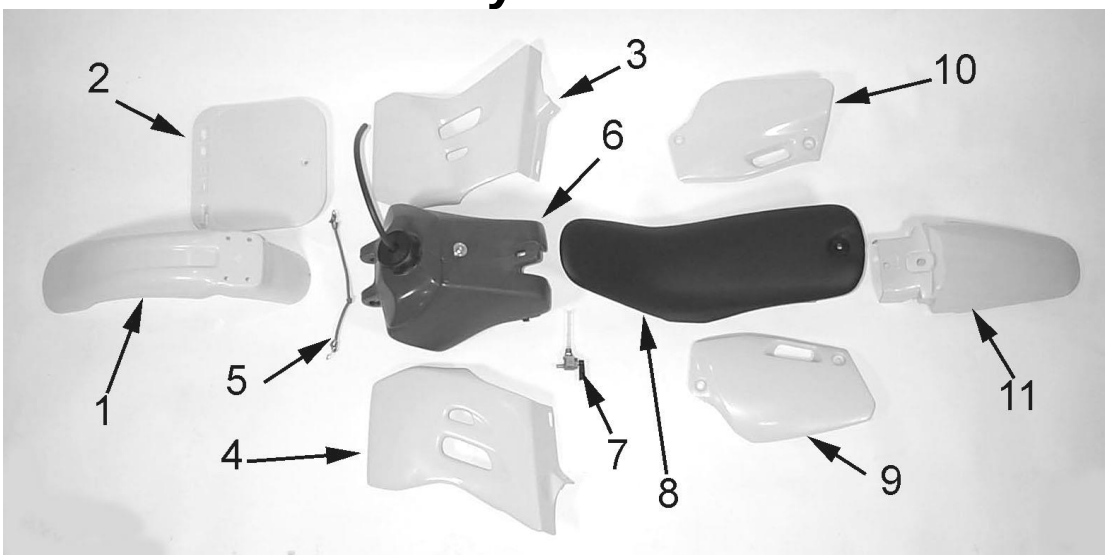

Figure 16

Plastic and Seat		
REF #	PART #	DESCRIPTION
NOT SHOWN	TCMU2007	GRAPHIC KIT 2007 CM
1	TCHA0107	FRONT FENDER
NOT SHOWN	HCBF0616	FENDER BOLT, M6X16 FLANGE HEAD (4 REQ'D)
2	TCMU0005	NUMBER PLATE – FRONT
NOT SHOWN	HCBF0625	M6X25 FLANGE HEAD BOLT – FRONT NUMBER PLATE MOUNT
3	TCHA0008	RADIATOR SHROUD – RIGHT
Not shown	TCMU0032	RADIATOR PAD
4	TCHA0009	RADIATOR SHROUD – LEFT
5	MCMUBC01	BUNGEE CORD – SHROUD HOLDING
6	TCHA0001	FUEL TANK – NOT COMPLETE
NOT SHOWN	TCHA0002	CAP – FUEL TANK
NOT SHOWN	TCHA0003	HOSE – FUEL CAP
NOT SHOWN	HCFH0620	M6X20 PHILIPS HEAD SCREW – SEAT & SHROUD HOLD
NOT SHOWN	TCHA0005	SPACER – SEAT & SHROUD HOLD
NOT SHOWN	TCHA0006	SPACER – FRONT TANK MOUNT (2 REQ'D)
NOT SHOWN	HCBC0685	M6X85 SHCS – FRONT TANK MOUNT
NOT SHOWN	HCNL0601	6MM LOCK NUT – FRONT TANK MOUNT BOLT
NOT SHOWN	HCBC0645	M6X45 SOCKET HEAD CAP SCREW
NOT SHOWN	TCHA0004	BUSHING – REAR TANK MOUNTING
7	TCMU0000	FUEL PETCOCK '06 STYLE LEVER
Not Shown	FCMU0026	FUEL LINE, 5"
Not Shown	MCMUCL04	HOSE CLAMPS – FUEL LINE
8	TCCM0007	SEAT
NOT SHOWN	HCBB0635	M6X35 BUTTON HEAD CAP SCREW – SEAT HOLDING
9	TCHA0011	NUMBER PLATE – LEFT REAR
NOT SHOWN	HCBF0616	M6X16 FLANGE HEAD BOLT – FRONT SECURE
NOT SHOWN	HCBF0620	M6X20 FLANGE HEAD BOLT – FENDER & REAR SECURE
NOT SHOWN	HCNF0602	6MM NYLOC FLANGE NUT
10	TCHA0010	NUMBER PLATE – RIGHT REAR
NOT SHOWN	HCBF0616	M6X16 FLANGE HEAD BOLT – FRONT SECURE
NOT SHOWN	HCBF0620	M6X20 FLANGE HEAD BOLT – FENDER & REAR SECURE
NOT SHOWN	HCNF0602	6MM NYLOC FLANGE NUT
11	TCHA0112	FENDER – REAR
NOT SHOWN	HCBF0616	M6X16 FLANGE HEAD BOLT – FENDER & AIRBOX SECURE

Parts – Rear Brake

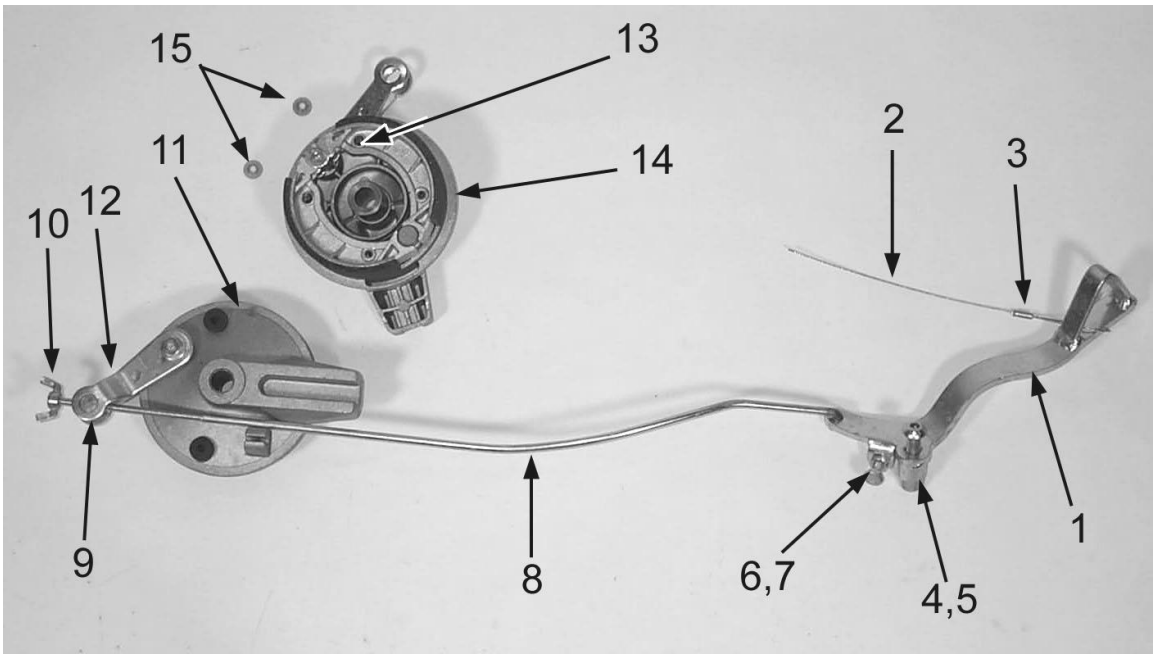

Figure 17

Rear Brake System		
REF #	PART #	DESCRIPTION
1	BCCM0002	BRAKE PEDAL W/ TEETH
2	BCMU0008	CABLE – BRAKE SNAKE
3	BCMU0009	CRIMP – BRAKE SNAKE
4	HCBB0803	M8X40 BUTTON HEAD SCREW
5	HCNL0801	8MM LOCK NUT
6	HCBH0602	M6X25 HEX HEAD BOLT (BRAKE STOP ADJUST)
7	HCNS0601	6MM NUT
8	BCCM0105	BRAKE ROD
9	BCMU0111	BRAKE ROD BARREL
10	HCNW0001	BRAKEROD WINGNUT
11	BCMU0109	BRAKE HUB - REAR
12	BCMU0112	BRAKE ARM – REAR
13	BCMU0010	SPRING – BRAKE RETURN
14	BCMU0110	BRAKE SHOE (PAIR)
15	BCMU0011	PUSH NUT – BRAKE SECURE (2 REQ'D)
16	HCCP0001	COTTER PIN - 3/32 X 1/2
17	HCWF0502	5MM FLAT WASHER

Parts – Rear Wheel

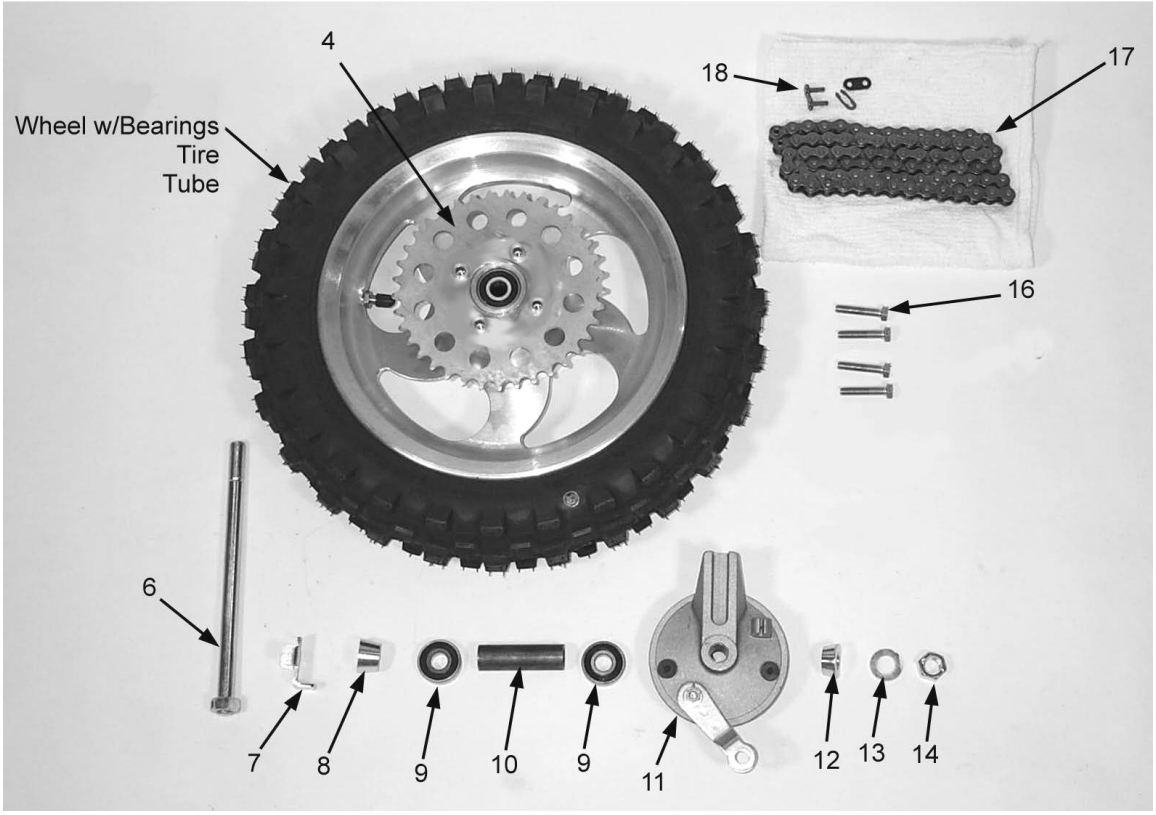

Figure 18

Rear Wheel		
REF #	PART #	DESCRIPTION
1	WACJ0002	WHEEL W / BEARINGS
2	WCMU0275	TIRE – REAR 10X2.75”
3	WCMUTU10	TUBE – 10”
4	PCMU01XX	REAR SPROCKET –NO DAMPER ALUM, XX DENOTES TEETH
6	WCMU0016	REAR AXLE
7	HCPA0002	AXLE HEAD FIXING PLATE
8	WCMU0001	REAR WHEEL SPACER (SPROCKET SIDE)
9	WCMU0020	WHEEL BEARING (2 REQ’D)
10	WCMU0003	WHEEL BEARING SPACER - REAR
11	BCMU0109	BRAKE HUB - REAR
12	WCMU0009	REAR WHEEL SPACER (BRAKE SIDE)
13	HCWF1202	WASHER – AXLE
14	HCNL1201	LOCK NUT – AXLE
16	HCBH0701	M7X35 HEX HEAD BOLT
17	PCCM0001	420 X 88 LINK
18	PCMU0001	MASTER LINK – 420 CHAIN

Parts – Shock

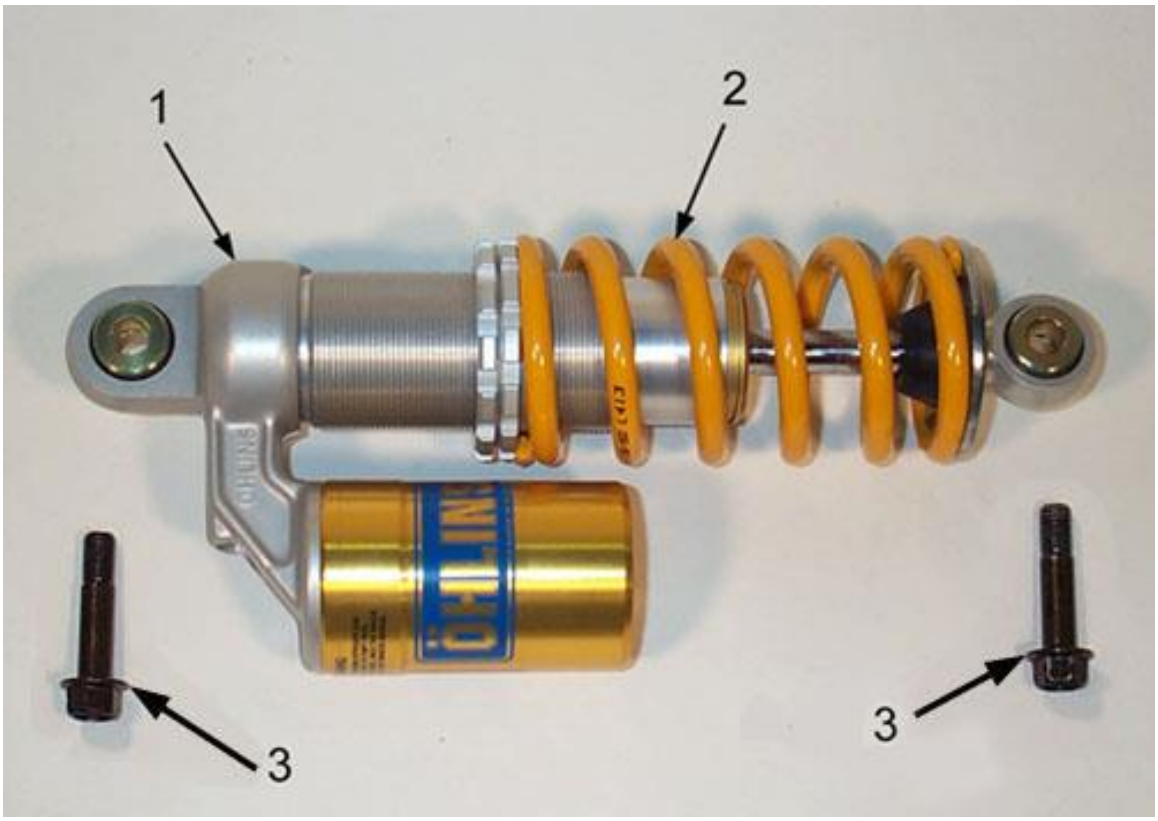

Figure 19

REAR SHOCK		
REF#	PART #	DESCRIPTION
1	SACM2007	SHOCK ABSORBER
2	SCMUOH05	SPRING – STANDARD (285 lb/in)
	SCMUOH04	SPRING – LIGHT (275 lb/in)
	SCMUOH06	SPRING – HEAVY (295 lb/in)
3	HCBF1040	M10X40 FLANGE HEAD BOLT

Parts – Swingarm Assembly

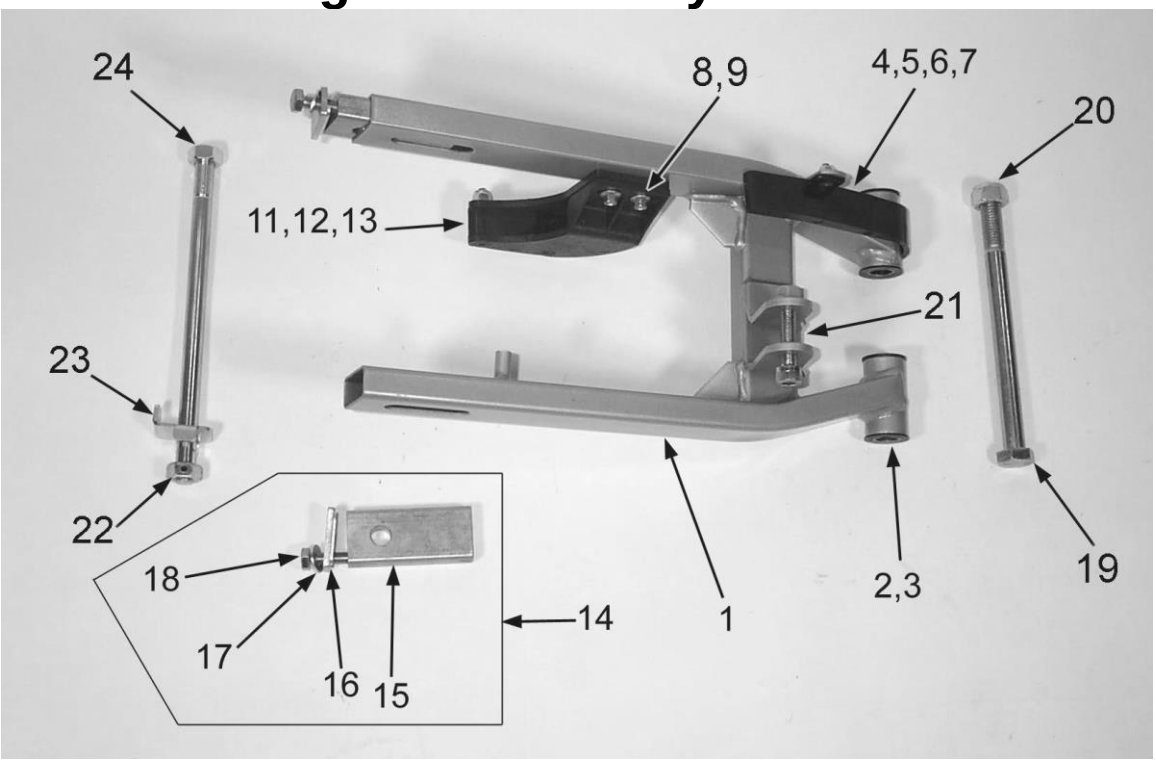

Figure 20

Swingarm		
REF #	PART #	DESCRIPTION
	GACM2004	SWINGARM ASSEMBLY (CONTAINS ITEMS 1 - 13)
1	GAMU0004	SWINGARM
2	GCMU0001	SWINGARM BUSHING (SINGLE PIECE)
3	GCMU0009	SPACER - PIVOT TUBE
4	GCMU0017	CHAIN GUARD
5	HCFH0516	M5X16 FLAT HEAD SCREW
6	HCWF0501	5MM FLAT WASHER
7	HCNL0501	5MM LOCK NUT
8	HCBF0620	M6X20 FLANGE HEAD BOLT (2 REQ'D)
9	PAKG0001	CHAIN GUIDE – ASSEMBLY COMPLETE
11	PCKG0004	CHAIN GUIDE - BOTTOM SLIDER
12	HCBFT640	M6 X 40 FLAT HEAD BOLT
13	HCNL0601	6MM LOCKNUT
14	FAMU0005	WHEEL PULL ASSEMBLY
15	FCMU0203	WHEEL PULL
16	FKMU0005	WHEEL PULL ENDCAP WITH WASHER
17	HCWF0801	8MM FLAT WASHER
18	HCBH0810	M8X65 HEX HEAD BOLT (FULL THREAD)
19	HCBF1403	SWINGARM PIVOT BOLT
20	HCNL1402	14MM LOCK NUT
21	HCBF1040	M10X40 FLANGE HEAD BOLT
22	WCMU0016	AXLE BOLT
23	HCPA0002	AXLE HEAD FIXING PLATE
24	HCNS1201	12MM LOCKNUT

Service

Trained technicians with precision gauging and proper assembly fixtures carefully assemble all Cobra engines to specific tolerances. If you feel you have the skills, and the appropriate tools, to perform the following service tasks please follow the instructions closely. The part numbers are listed throughout to help you when ordering parts from your local Cobra dealer.

If you don't feel comfortable with the service work, log on to www.cobramotorcycle.com to find a Cobra dealer or Call 517 437 9100.

Engine Service

One method for determining whether the top end of your engine needs rebuilt is to perform a WOT (Wide Open Throttle) kicking compression test. Before performing the procedure please read the caution notes below.

CAUTION:

- There appears to be a wide range of variability in reading compression gauges across the country.
- The head volume of this Cobra Motorcycle is very small and so requires many kicks ~20 before you establish the most accurate reading possible.
- Because of the geometry of the spark plug used in this Cobra Motorcycle, the adapter used with your compression tester must have a similar volume protruding into the combustion chamber to establish an accurate value.
- Length of hose on the compression tester will affect the reading. The shorter the hose length the more accurate your reading will be.

Because of these difficulties in measuring an *absolute* compression value, a useful *relative* value can be achieved by testing your bike's compression with your own particular gauge after a new top end or when the bike is new so that you know what your particular gauge reads on a 'fresh' engine. When it has dropped to 90% of its original value the engine will be down on power and would benefit from a rebuild. When it's dropped to 80% it really needs rebuilt! Using the table below will help you determine monitor the condition of your top end.

	Engine is Fresh Measured Value	Engine Down on Power Measured Value * 0.9	Engine NEEDS Rebuilt Measured Value * 0.8
Example	110 psi	110 psi * 0.9 = 99 psi	110 psi * 0.8 = 88 psi
Your Values			

Procedure for Compression Testing

1. Shut off the fuel petcock.
2. Install the compression gauge into the spark plug hole.
3. Hold the throttle to wide open, and kick repeatedly (approximately 20 times) or until the gauge reading does not increase in value with each kick.

Base Gasket Selection

Tools required

- 17mm wrench
- 1mm flexible solder material
- measurement calipers

When rebuilding the 'top end' of your Cobra motorcycle, care must be taken to ensure the proper squish clearance. Squish clearance is defined as the minimum distance between cylinder head and piston at TDC, and there are negative effects of either having too much or too little clearance. Since parts like the crank, connecting rod, cylinder head, piston, and crankcases all have varying tolerances, Cobra offers several different base gasket thickness' to ensure that you can always set the squish clearance of your engine to factory specifications.

For base gasket replacement use the code (see figure 21 for location) along with the table on the following page reorder the correct thickness gasket.

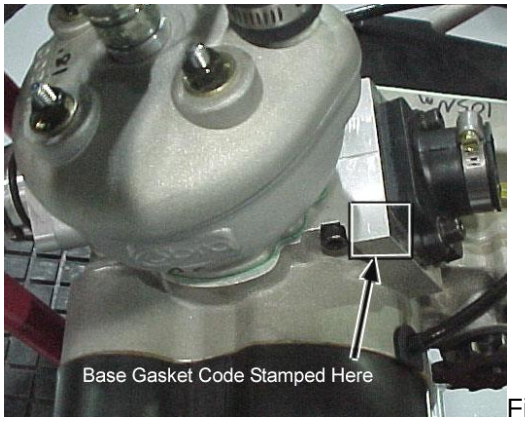

Figure 21

Code	Supplied Base Gasket Thickness		Cobra #
#	mm	inch	Part #
2	0.2	0.008	ZCMU0702
	0.25	0.010	ZCMU0011
3	0.3	0.012	ZCMU0703
4	0.4	0.015	ZCKG0501
5	0.5	0.020	ZCMU0705
6	0.6	0.024	ZCMU0706
7	0.7	0.028	ZCMU0707
8	0.8	0.031	ZCMU0708
9	0.9	0.035	ZCMU0015
1	1.0	0.039	ZCMU0016

NOTE
Tolerances will affect the actual gasket thicknesses.

If during the course of the maintenance more parts than the base gasket are changed, the squish clearance should be measured, and possibly a different base gasket will be required.

The easiest way to measure squish clearance is with 1mm to 1.5mm thick flexible solder wire (available through most popular electronic stores). The process is as follows:

- Assemble the top end of the engine with either; 1) the crankcase stamp recommended base gasket or, 2) if assembling with a new set of cases assemble with a 0.4mm (0.015”) base gasket, and torque the head nuts to the proper torque specifications leaving off the spark plug and ignition cover (piston rings can be left off to ease assembly).
- Carefully insert the solder wire though the spark plug hole, into the cylinder far enough such that the tip of the wire touches the left or right side cylinder wall (not the front or back as the piston will rock more and give incorrect measurement).
- Hold the wire at this position and rotate the crankshaft, by the flywheel nut (or kick lever) three revolutions to ‘smush’ the solder wire.

CAUTION:
If you rotate the flywheel nut in a counterclockwise direction there is a risk of loosening the nut.

- Pull out the wire and measure the solder thickness at the thinnest location near its tip accurately with the thin tips of calipers.
- Adjust base gasket thickness as necessary to get the desired value.

Upon completion, your final assembly squish clearance should agree with the chart below

Engine Removal

To service the bottom end and transmission, the engine must be removed from the frame.

Tools required

- 10, 11, 13, 22 mm wrench
- 8, 10, 14, 17 & 19 mm sockets
- 3, 4 & 5 mm hex key (Allen wrench)
- 7 mm nut driver, flat or Phillip, screwdriver for hose clamps
- Spring remover
- Flywheel / clutch puller (#MCMUTL68)
- Clutch nut removal tool (Call local dealer for details).

Procedure

1. Remove the seat.
2. Turn of the fuel at the petcock and disconnect the fuel line.
3. Remove the tank (8 mm socket).
4. Remove the carburetor from the inlet (flat head or Phillips head screwdriver, 7 mm nut driver).
5. Remove the silencer & pipe (spring remover, 8mm socket).
6. Locate a suitable container for the engine coolant and disconnect the coolant lines connected to the engine (8 mm socket).

NOTE:
If the coolant looks to be free of contaminates it may be reused.

7. Remove the master link from the chain.
8. Remove front engine mount bolt (13 mm socket, 6 mm hex key).
9. Remove the swingarm bolt (22mm socket).

NOTE:
Only drive the swingarm bolt far enough to clear the engine, leave it holding the one side of the swingarm to the frame

10. Remove the engine from the right side of the frame.

NOTE:
If you are merely performing a top end service skip ahead to *Top End Disassembly Procedure*.

Complete Engine Disassembly Procedure

1. Remove the magneto cover (4mm hex key)
2. Remove the bolt from the water pump shaft (4mm) and slide off the belt cover and the water pump belt

3. Using a flywheel holding tool and 14 mm socket remove the nut that secures the flywheel.
4. Using the Cobra flywheel / clutch puller (#MCMUTL68), remove the flywheel from the crankshaft.
5. Remove the stator (4mm hex key).
6. Remove the left hand thread blue nut holding the CFD to the transmission input shaft (19 mm socket).
7. Remove the special nut / starter gear that holds on the clutch (special tool available, contact your local dealer).
8. With the Cobra flywheel / clutch puller (#MCMUTL68), remove the clutch from the crankshaft (details in Clutch Service portion of this manual).

Top End Disassembly Procedure

1. Remove the cylinder head nuts (10mm).
2. Remove the cylinder head outer.
3. Remove the cylinder head insert.

INSPECTION NOTE:
Inspect the cylinder head for deposits and abrasions.

1. If there are deposits they should be removed
    a. Black oily deposits (indicating a rich mixture or improper oil type/quantity) can be removed with solvent
    b. Crusty deposits (indicating dirt ingestion) can be removed with solvent and may require some scraping.
2. Abrasions
    a. Pitting or erosion indicates detonation and may require cylinder head replacement, also
        i. Retard the ignition timing
        ii. Use a higher octane fuel
    b. Missing chunks or indentations indicate broken hardware or ingested items - replace the cylinder head.

4. Remove the cylinder.

INSPECTION NOTE:
Inspect the cylinder bore for abrasions, deposits, and missing coating.

1. If abrasions: scrapes, scratches, pitting, etc… are found, replace the cylinder.
2. If deposits are all are found
    a. Clean with muratic acid.
    b. Once the deposits are removed, inspect for abrasions and missing surface coating.
        i. If there are abrasions or missing coating, replace.
        ii. If all looks well, the cylinder may be saved.

⚠ WARNING

Muratic acid can be dangerous. Follow the manufacturers instructions closely.

5. Remove the piston clip with a scribe.
6. Remove the piston pin with a piston pin remover.

INSPECTION NOTE:
Inspect the piston for abrasions and deposits on the top and sides and clean or replace as necessary.

INSPECTION NOTE:
Piston ring end gap should be between 0.008” (0.2 mm) and 0.020” (0.5 mm)

Splitting the Cases

1. Remove the fasteners holding the two halves of the crankcase together.
2. Separate the cases with a proper case splitting tool.

CAUTION:
Take caution when handling the crankshaft. It is the main power transfer to the rest of the engine. If it is out of alignment, it will cause premature failure of your bearings which can lead to serious damage to the cylinder as well as the rest of the engine. Do not try to true the crank yourself. Truing the crank should be done professionally.

CAUTION:

- If you split the cases, check the gear tooth faces for chipping & signs of fatigue.
- Check the small needle bearings for fatigue. If the bearings are damaged, the engine cases should be checked to make sure the needle-bearing casing didn’t oblong the bearing hole in the case.
- Needle bearings should be replaced every couple months of hard racing.

Engine assembly

CAUTION:
For any seals that are to be installed, apply a light amount of grease to the seals’ ID, assembly lube on all bearings and a small amount of Loctite to the OD.

1. Press the three bearings into the respective holes in each case half.
2. Press in the crank seals such that the concave side faces the crank weights.
3. Press in the counter shaft seal (concave side faces inside of transmission)
4. Install the water pump assembly wire ring retainer
5. Press in the water pump assembly
6. Tap both ways axially then verify easy rotation.
7. Inspect the crankshaft for proper true geometry (no more than 0.002 “, 0.05mm, measured at bearing journal area while supported from the ends).

CAUTION:
Insert a 7.05mm (0.278”) shim between the crank throws before pressing on the crank.

8. Insert the case screws with the proper lengths at locations shown.

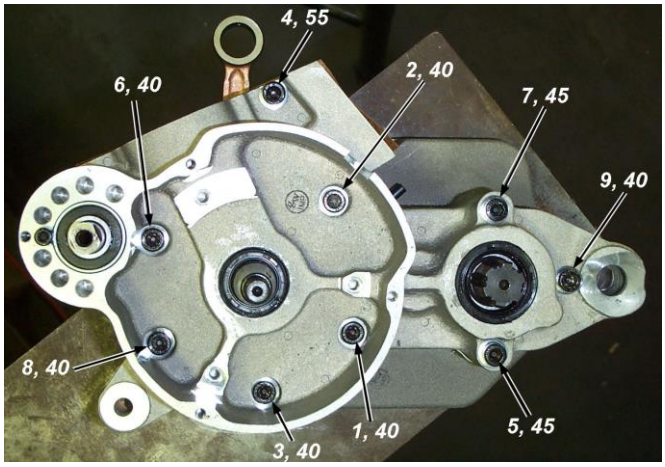

Figure 28

9. Torque to 12 Nm (105 in-lb) in the pattern shown in figure 28.
10. Trim away any excess gasket material if necessary.

NOTE: Check engine mount holes for excess material that may cause problems in engine installation.

11. Install the piston with new wrist pin bearing and, pin and clips.

CAUTION:
Be sure to install the piston such that the arrow on the top piston surface points to the exhaust (front of bike/engine) and put assembly lube on the connecting rod bearing.

12. Install the piston rings.

CAUTION:
Ring end gap should be no less than 0.25 mm (0.010”) and no more than 0.64mm (0.025”)

13. Install the base gasket.

CAUTION:
See base gasket selection at the beginning of service section.

14. Install the cylinder being sure that the piston rings are properly aligned with the indexing pins.

CAUTION:

Never force the cylinder. If resistance is felt, determine the problem and solve it. Once installed slightly rotate the cylinder back and forth insuring that the rings are properly seated.

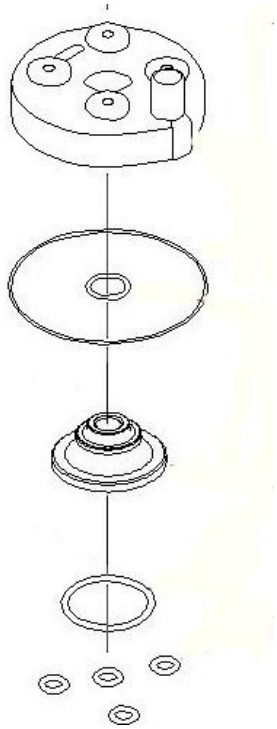

Figure 29

15. Install cylinder head insert.

NOTE: A light application of silicone grease can help hold the O-rings into position during assembly.

16. Install O-RINGs as shown in figure 29.
17. Install the cylinder head.
18. Install the washers (with flat side down) and nuts. Torque to 105 in-lb (12 Nm)
19. Install reed and inlet manifold with new gasket (105 in-lb, 12 Nm).
20. Leak check the engine to 20 psi to ensure proper seal.
21. Install stator reinstalling the grommet and wires (snug the bolts).
22. Install the rotor per *Rotor Installation* section, under the *S3: Ignition* portion of this manual.
23. Install the water pump outlet pipe (apply Ultra black Hi-Temp RTV silicon gasket maker to the threads before assembly) before installing the clutch and rotate to a vertical position with the engine resting on a bench
24. Install the CFD.
25. Install the clutch per *Clutch Installation* section in this manual.
26. Install the coolant drain plug with copper washer (11 ft-lb, 15 Nm).
27. Make sure that the exhaust spacer is on the cylinder (53 in-lb, 6 Nm).
28. Install the spark plug with a fresh gasket (to apply the proper torque to the spark plug when inserting, one must first screw the spark plug in until the metal gasket ring causes resistance and then turn another 1/8 to ¼ turn).

Clutch

CAUTION:
The clutch components (arbor, shoes, bolt, and belleville washers) on your 2006 Cobra are similar looking but different in geometry from prior years. Do not mix old and new parts as damage will occur.

Cobra clutch puller assembly:

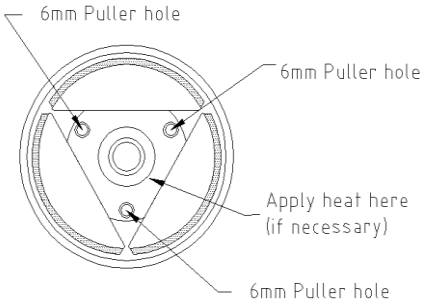

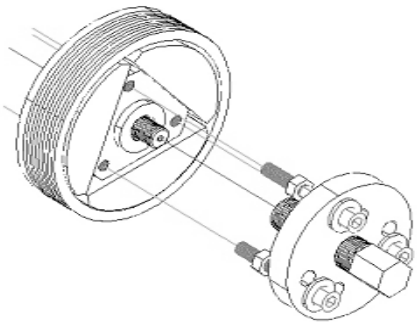

Figure 30 **Figure 31 Clutch puller installation**

Tools recommended for clutch service:

- Universal clutch puller- a universal puller that pulls the clutch, main drive gear and rotor. (Part # MCMUTL70).
- 5mm T-handle
- Clutch nut removal tool (ECMU0078) & spanner wrench (ECMU0082).
- *Cobra 3 Shoe Clutch Milk* (Part # MCMUGF01).

CLUTCH REMOVAL:

1. Drain the engine transmission oil and remove the clutch cover.
2. Remove the clutch nut (not left hand thread) on the end of the crankshaft with the clutch nut removal tool.
3. Attach the Universal Puller. There are three 6mm clutch puller holes located on the ends of the center hub. (figures 30 & 31)

CAUTION:
Do not use a jaw type puller or use the 6mm tapped holes as jackscrews or you are likely damage the clutch or drum.

4. If necessary apply heat to the center clutch hub.

CAUTION:
Do not heat the crankshaft threads or the aluminum shoes.

5. Keep tension on the puller as you are heating it.

⚠ WARNING
The clutch will often pop off under tension from the puller and it will be very hot.

CLUTCH WASHER STACKUPS:
Once the clutch is removed, and cool to touch, carefully put it into a vice and remove the center shoulder bolt out of each clutch shoe. You will probably have to heat the center hub again to remove the bolts. Once you get a bolt loosened, carefully remove it with the shoe and observe the way the spring washers are stacked. Clean the washers and bolt if you intend to reuse.

The spring stacks in your Cobra clutch will contain 11 individual springs and flat washer(s) configured as a 5 ½ stack. See figure 32. This clutch is designed such that it reconfigured by the customer to achieve different clutch engagements 'hits' by changing washer counts and configurations.

CAUTION:
Generally reassemble the springs as you removed them from the engine or as you received them from Cobra. If you are unsure call the Cobra Technical Support Group 517 437 9100 #4, and consult the experts.

CLUTCH ASSEMBLY REFERENCE DRAWING		
REF #	**PART #**	**DESCRIPTION**
1	CAMU0013	Set of three shoes, springs, bolts, flat washers & nuts
2	CAMU0010	Set Of three springs, washers, bolts & nuts
4	HCBS0004	One metric clutch bolt

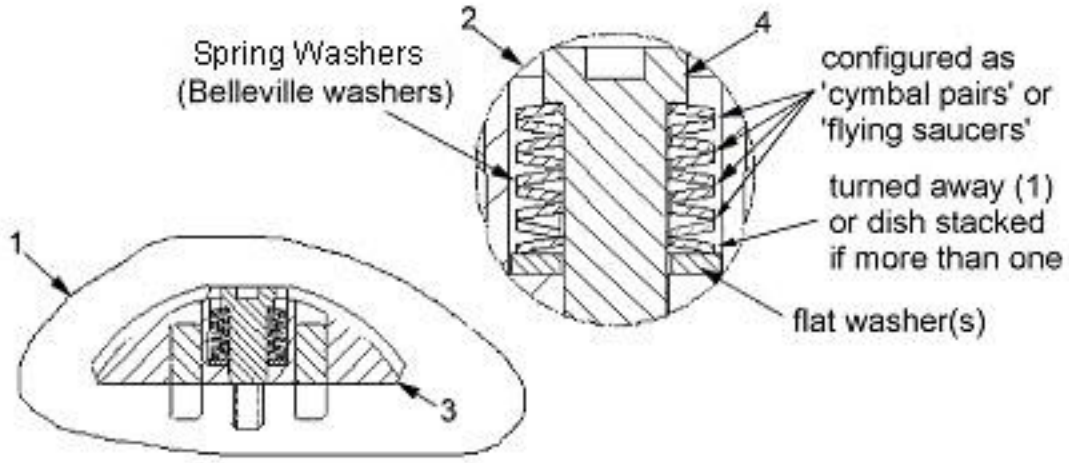

Figure 32 Some configuration of clutch spring stack. Each 'spring' stack contains multiple springs (Belleville washers) - arranged into three, four, or five 'flying saucers', or turned away against the flat washer(s). Shown is the 4 ½ stack..

Stack	Total Springs	Flying Saucers or Cymbal Pairs	Turned Away or Dish Stacked	Std. Flat Washer
5 ½	11	5	1	

Clutch adjustment washers

Your Cobra comes stock with flat washer(s) at the bottom of the spring washer stack. Cobra offers several thicknesses of thin adjustment washers that allow clutch engagement tuning. Increasing the flat washer(s) thickness increases the engine speed for clutch engagement thus increasing the abruptness of clutch engagement (harder hit). Conversely, decreasing the flat washer(s) thickness decreases the engine speed for clutch engagement thus decreasing the abruptness of clutch engagement (softer hit).

Part #	Thickness mm (inch)
HKCSM015	1.5 (0.060)
HKCSM012	1.2 (0.047)
HKCSM008	0.8 (0.031)
HKCSM006	0.6 (0.025)
HKCSM005	0.5 (0.020)
HKCSM004	0.4 (0.015)

Use the table above to order adjustment washers. Replace the stock washer with the proper combination of adjustment washers that delivers the desired clutch hit.

Hit	Thickness (mm)	Thickness (inch)
Softer ↑	0.8	0.031
	0.9 (0.4 + 0.5)	0.015 + 0.020
	1.0 (0.5 + 0.5)	0.020 + 0.020
Harder ↓	1.1 (0.6 + 0.5)	0.020 + 0.025

CAUTION:
It is easy to prematurely damage the clutch and other engine components with improper clutch adjustment. If you are unsure of how to adjust the clutch, by even the slightest, contact the Cobra Technical Support Group before making adjustments.

Clutch shoe wear:

- If the clutch has been slipping and shows signs of glazing, it is best to replace the shoes. We have found that once the shoes are glazed, even if deglazed with emery paper or a file, the performance is reduced.
- The best way to prevent glazing is by not gearing too high, changing the oil as specified and by not blipping the throttle. Every time you blip the throttle, you are working your clutch springs.

CAUTION:
The clutch produces a tremendous amount of heat and when a rider is blipping the throttle. This makes the clutch and clutch springs wear out quicker. This also makes your engine tend to run hotter which decreases engine power and degrades ignition stator efficiency. It is important to train your rider ***NOT*** to be a **throttle 'blipper'**.

CAUTION:
Sludge build-up between the spring washers also keeps the clutch shoe from engaging fully and this will cause the clutch to start to slip. So you will need to clean the sludge out or just replace the spring washers and bolts with new ones. How quickly this sludge builds up depends on how often you **change your oil** and whether your rider is a throttle ‘blipper’.

REF #	PART NO.	DESCRIPTION
1	ECMU0118	Crank seal
2	ECMU0040	Clutch to hub spacer (standard 0.030” 0.76mm)
	ECMU0040T	Clutch to hub spacer (thin, 0.015” 0.38mm)
3	ECMU0119	Needle bearing
4	ECMU0120	Clutch basket with bearing
5	CAMU0005	Clutch Complete w/ Arbor
6	ECMU0018	Clutch nut
	CCMU0029	Clutch arbor

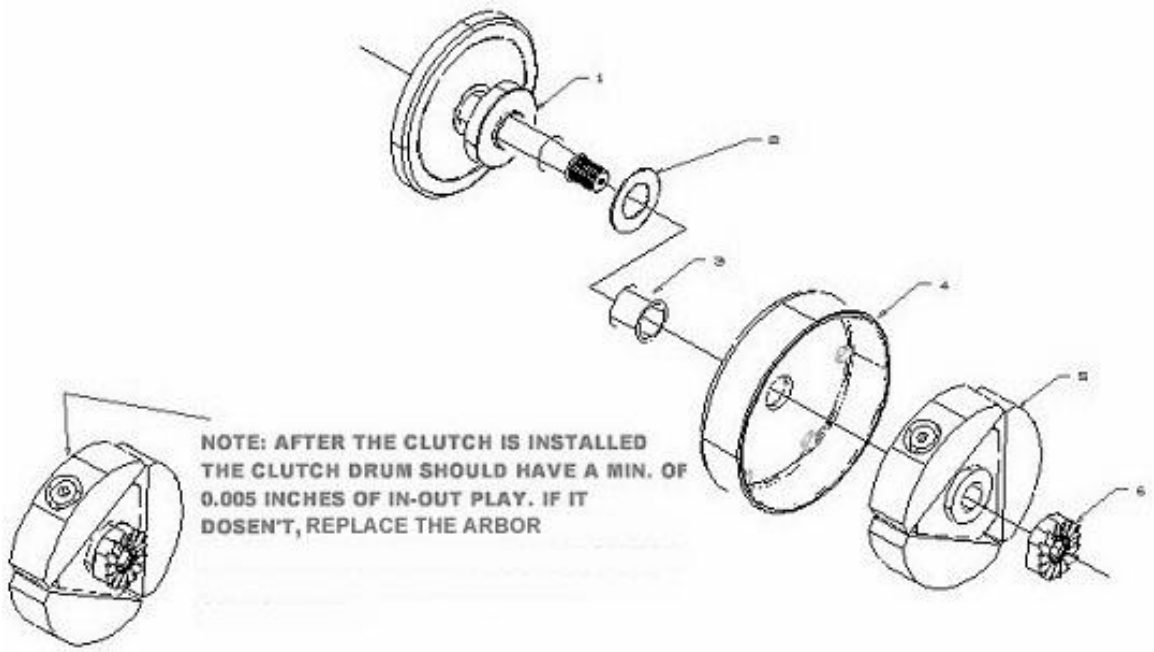

Figure 33, Clutch Assembly Drawing

CLUTCH ASSEMBLY:

1. After cleaning or replacing the spring washers, reassemble the stack up of washers.

CAUTION:
It is important to reassemble the washer stack to that which is recommended or to your own specialized stack.

CAUTION:
It is also important that all three shoes are stacked the same. (See figure 32)

2. Clean the threads of the stack bolt and the clutch with contact cleaner removing all old thread locking material.
3. Apply high strength thread lock material to the stack bolt and tighten to 12 ft-lb (16 N-m).

CAUTION:
Avoid allowing excess thread lock material to contact the spring washers and the clutch or the clutch is likely to malfunction.

4. Clean the center hole of the clutch and on the tapered section of the crankshaft.
5. Apply a small amount of wicking / bearing retainer (green) thread lock agent to the center tapered section of the crankshaft and taper of clutch arbor.

CAUTION:
Lean the bike / engine such that any excess thread lock agent goes away from the bushing in the clutch drum.

6. Put the clutch back in.
7. Apply high strength thread locking agent to the threads and install the nut and torque to 35 ft-lb (47Nm) with the special socket (see figure 33).

CAUTION:
Use high strength (red) thread locker on the threads of the clutch nut. If you are using an impact socket, just zap it lightly with an air wrench to tighten it because there are only about 4 threads inside the nut and they can be easily stripped. If you are tightening it by hand, you can hold the crank from turning with the clutch removal spanner ECMU0082.

Install the clutch cover tightening the bolts from inside out. (8 or 10 mm socket, 5.8 ft-lb, 7.8 Nm).

INSPECTION NOTE:

- There must be in / out play in installed clutch, 0.4mm to 1.0 mm (0.015" to 0.040").
- Excess in/out will cause early crank seal failure.
- A blue clutch drum is worn out from excessive slippage or improper lubrication.

NOTE:
To ensure proper engagement of the kick gear with the starter nut, tighten the six screws only to the point of being not extremely loose. Using one hand rotate the kick lever to ½ stroke and hold while tightening the six screws completely with the other hand.

8. Fill with oil (235 ml (8.0 oz) *Cobra 3 Shoe Clutch Milk* (Part # MCMUGF01).

Ignition

Stator care

Stator failure will result from running the bike hot. Following is a list of things that will make your engine run hot.

1. The timing should not exceed the maximum specifications listed.
2. Improper carburetor jetting.
3. Improper spark plug heat range. Never run a hotter plug than the specified spark plug.
4. Clutch slippage. See "CLUTCH" section for causes of slippage.

CAUTION:

- Because of the amount of heat generated by the clutch and engine during extended periods of riding, it is advisable to remove the ignition cover afterward to allow the ignition to cool off. The heat transfers through the cases

and can damage the stator as it cools off because of lack of airflow around the stator.

- Ignition will overheat if the gap between the rotor and stator is not large enough. There should be even clearance as the rotor rotates relative to the stator.

- Non-resistor spark plug caps should be used. Resistor caps will result in a weaker spark that will reduce performance.

- Make sure connections are free of dirt.

The proper ignition timing for this model of is at **0.040"** before Top Dead Center (that means 0.040" before the piston reaches the highest point of it's travel in the cylinder).

CAUTION:
Advancing the ignition timing will cause the engine to run hotter, in-turn causing power loss, shortened clutch life, and possibly lead to premature stator failure, and can also cause detonation which can lead to premature piston and ring failure.

Tools recommended for timing service:
- Compact motorcycle dial indicator
- Universal clutch puller- a universal puller that pulls the clutch, main drive gear and rotor. (Part # MCMUTL70).

TIMING YOUR IGNITION:
1. Remove the spark plug.
2. Insert the dial indicator into the spark plug hole.
3. Remove the four bolts from the ignition cover.
4. Remove the water pump belt from the rotor and water pump shaft.
5. Turn the crankshaft counterclockwise until it reaches top dead center.
6. Set the dial indicator to zero
7. Turn the crankshaft clockwise until the dial indicator reaches 0.040" (1.02mm) from top dead center.
8. Line up the lines on the stator and the rotor (figure 35). Otherwise loosen the three 5mm bolts to adjust the stator.

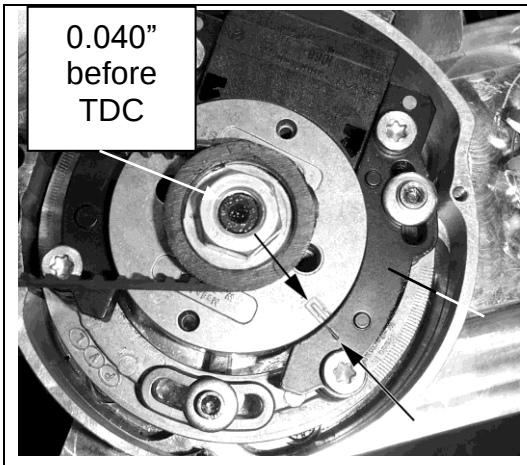

Figure 26, Lining up the line on the rotor with the line on the stator.

Figure 27, Using a dial indicator to measure piston height for setting ignition timing.

ROTOR INSTALLATION:

1. Torque the nut on the rotor to 40 ft-lb (54 Nm) with high strength (red) thread locking agent.
2. Recheck the timing following the procedure of *timing your ignition.*
3. Install the water pump belt back on.
4. Bolt the ignition cover back on.
1. Put the spark plug back in, and firmly stick the spark plug cap onto the spark plug.

Cooling System

The water pump in the engine keeps the radiator fluid in circulation throughout the motor. The air stream running through the radiator cools the radiator fluid. Therefore dirty radiators additionally reduce the cooling effect.

Radiator fluid removal:

1. Remove the coolant drain plug (A) on the front of the engine case (figure 28).

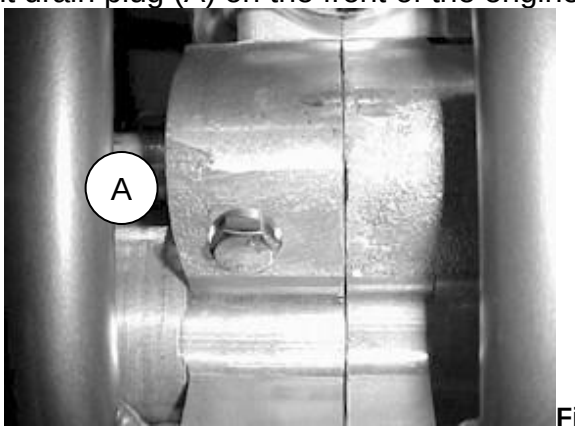

Figure 28

To remove radiator cap:

2. Turn the cap counter clockwise to the first stop and wait there for a few seconds.
3. Push the cap down and turn it further in the same direction and remove the cap.

NOTE: Inspect the old coolant for visual evidence of corrosion and abnormal smell.

Tools recommended for impeller service:

- Flat head screwdriver
- 13mm- hex wrench
- 3mm hex key
- 4mm hex key
- 5mm hex key
- 8mm hex key
- Propane torch
- 3/8” diameter x 8” long steel rod
- Hammer

COBRA IMPELLER SERVICE INSTRUCTIONS

1. Remove exhaust pipe and gas tank (you may be using a propane torch in step 12.
2. Remove radiator cap and drain engine coolant by removing the 13mm- hex head coolant drain plug.
3. If the impeller is damaged or broken completely back flush the coolant system to ensure no solid pieces are in the system.
4. Drain engine transmission oil by removing drain screw using a 13mm- hex wrench. (item 2 in the figure below).
5. Remove right side radiator hose and unscrew coolant fitting with a 8mm hex key.

5. Remove ignition cover using a 4mm hex key (four places)
6. Stick a 3mm hex key in the water pump shaft cross hole, and remove belt retainer screw using a 4mm hex key. (Figure 41 - item 1)
7. Remove belt retainer, water pump belt and water pump fan pulley.
8. Remove bearing retainer screw using a 3mm hex key. (Figure 29 – item 2)

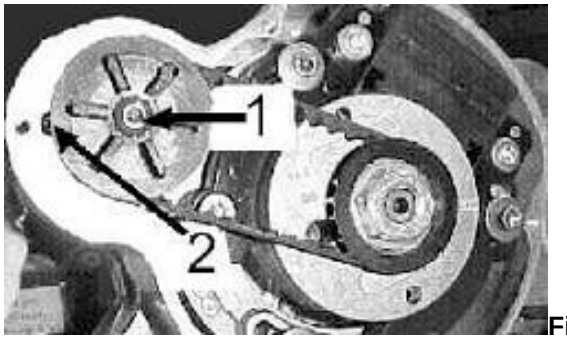

Figure 29

9. Heat engine case around area of impeller lightly with a small propane torch. Using a 3/8” diameter x 8” long steel rod, tap impeller assembly out of engine as

shown in figure 30.

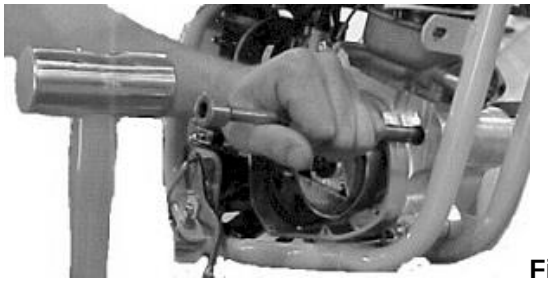

Figure 30

CAUTION:

Too much heat can be detrimental to the engine cases.

10. The shaft assembly is serviceable. Use a 4mm hex key to remove impeller retainer screw. Remove impeller, seal and both bearings. Check shaft for wear in the area of the seal. If there is any sign of wear (like a groove) replace the shaft.

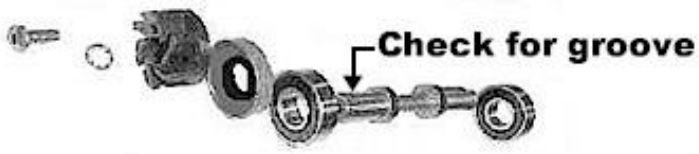

Figure 31

11. Reinstall new bearings, seal (open side toward impeller) and impeller. Clean all threads and use green (wicking / bearing retainer) thread locker.
12. Using a liberal amount of grease on the outside seal, bearings and inside of case, reinstall bearing assembly by using a 0.500” ID by 1.000” OD steel tube 2” long and tap on end of tube per figure 32.

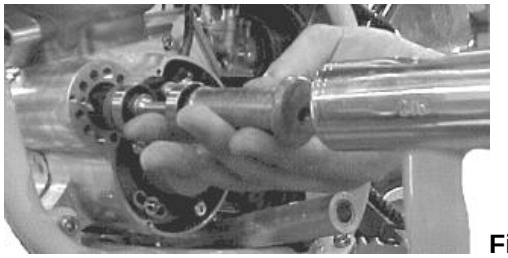

Figure 32

13. Re-assemble in reverse order of disassembly.

CAUTION:
Clean all threads and use blue (medium strength) thread locker on the belt retainer screw.

NOTE:
Apply Ultra black Hi-Temp RTV silicon or Teflon pipe sealant to the tapered pipe threads of the coolant fitting before assembly.

NOTE:
Refill the coolant system with 50/50 antifreeze-coolant / distilled water.

CAUTION:
Do not mix Propylene Glycol based coolant / antifreeze solutions with Ethylene Glycol based coolant / antifreeze solutions.

Fuel & Air System

Carburetor:

Tools recommended for carburetor service:

- Small flat head screwdriver
- WD-40
- 8mm socket

Carburetor		
REF. #	**PART #**	**DESCRIPTION**
	RCCM0001	COMPLETE CARBURETOR 14MM
1	RCMU0305	CARB SLIDE
2	RCMU0601	NEEDLE
3	RCMU00	ATOMIZER AU 2.62
4	RCMU0092	MAIN JET
5	RCMU0055	PILOT JET
6		CHOKE JET
7	RCMU0301	FLOAT
8	RCMU0102	RUBBER CABLE CAP SEAL
9	RCMU0003	CABLE ADJUSTOR
11	RCMU0006	TOP CARB SCREW
12	RCMU0106	CARB TOP
13	ZCMU0007	TOP CARB GASKET
14	RCMU0004	SLIDE SPRING
15	RCMU0205	NEEDLE RETAINER PLATE
16	RCMU0007	NEEDLE CLIP
17	RCMU0204	CHOKE ASS'Y. 2001 CM
20	RCMU0009	FUEL MIXTURE SCREW
21	RCMU0011	IDLE ADJUSTMENT SCREW
25	RCMU0103	FLOAT BOWL GASKET
26	RCMU0107	FLOAT NEEDLE
27	RCMU0012	DIFFUSER
28	RCMU0016	FLOAT RETAINER PIN
29	RCMU0106	FLOAT BOWL
30	RCMU0201	BOTTOM FLOAT SCREW
31		
33	RCCM1301	VELOCITY STACK – 04 and later
	RCCM0314	14MM CARB RESTRICTOR

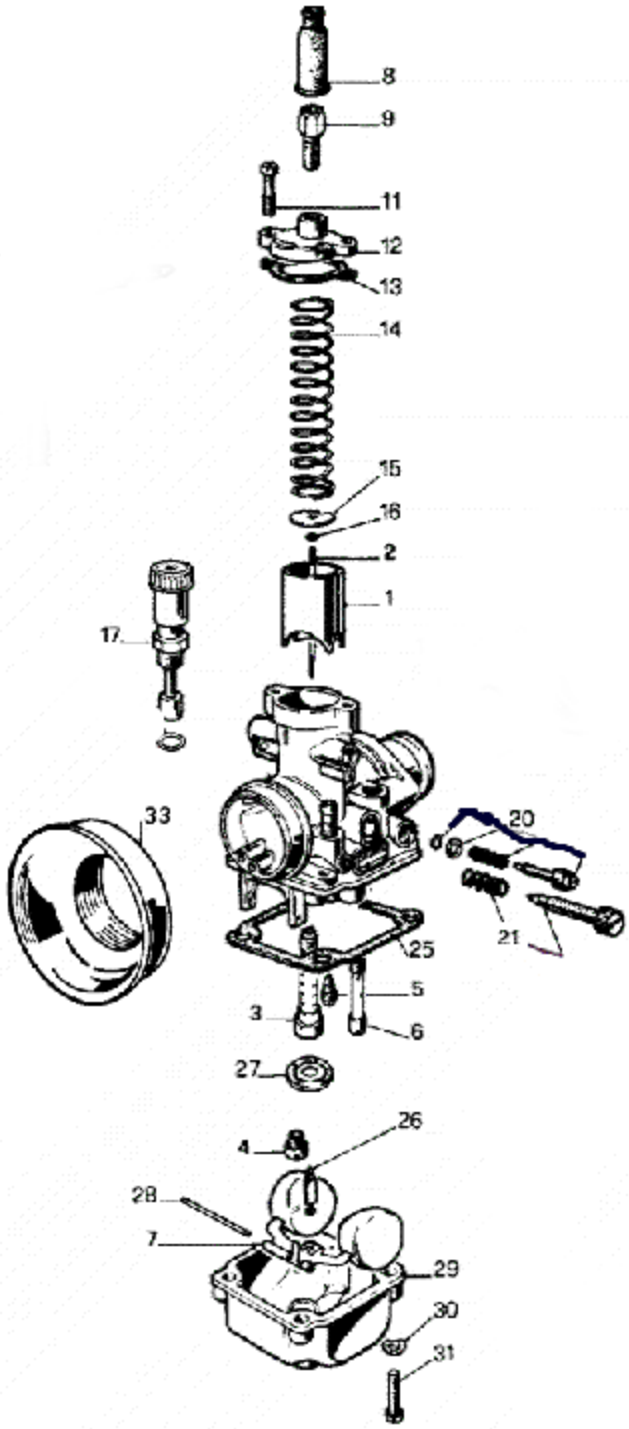

Figure 33

Your Cobra is equipped with an adjustable carburetor. Some fine-tuning may be needed according to weather condition and altitude. Proper jetting is ***very*** important for engine performance and engine life. Serious damage to the engine can occur if not properly adjusted.

IDLE ADJUSTMENT:
On the left side of the carburetor, there are two adjustment screws. The larger screw with the knurled head is the idle adjustment screw. To raise the idle, turn the screw in clockwise (in 1/4 turn increments) and rev the engine after each adjustment. To lower the idle, turn the screw counter-clockwise.

TOP END JETTING:
Indications that the engine is running too rich (too much fuel for the air) are:
- Engine not revving out or blubbering at high RPMs.
- Engine will not 'clean out'
- Wet or black spark plug

NOTE: Before changing jetting be sure that the air filter is properly cleaned and has the usual amount of air filter oil. An overly dirty air filter can cause the engine to run rich.

If the engine is running rich on the top end it should be leaned out. Leaning it out can be done by:
1. Changing the main jet to a smaller number.
2. Raising the needle clip (this lowers the jet needle) one notch at a time on the slide.

Indications that the engine is running too lean are:
- Engine cutting out on top end.
- Engine overheating and ultimately seizure.
- White spark plug

CAUTION:
It is much safer to operate the engine slightly rich as opposed to slightly lean. This is because an overly rich engine will just run poorly while an overly lean engine will seize, potentially causing an expensive top end rebuild and a DNF.

To richen the carburetor:
1. Change the main jet one number at a time (larger).
2. Lower the needle clip (raising the jet needle) one notch at a time until the engine starts to blubber on the top end, then move the clip back up one notch or until you get the blubber out.

FUEL MIXTURE SCREW
The smaller brass screw that is towards the front of the engine is a fuel mixture screw. This screw will also richen and lean your engine more on the bottom and mid-range. In warmer conditions, turn the screw in. In colder conditions, turn the screw out. Be sure to keep the carburetor very clean and make sure you don't

have water or dirt in the carburetor bowl. Use automotive carburetor cleaner or WD-40 to clean the carburetor inside and out.

STOCK CARBURETOR SETTINGS

The stock carburetor settings from the factory are:

- 55 pilot jet
- 92 main jet

Cleaning the carburetor:

⚠ WARNING

Clean the carburetor in a well-ventilated area, and take care that there is no spark or flame anywhere near the working area; this includes any appliance with a pilot light. Because of the danger of highly flammable liquids, do not use gasoline or low flash-point solvent to clean the carburetor.

1. Make sure the fuel is shut off.
2. Remove the carburetor.
3. Drain the fuel from the carburetor.
4. Disassemble the carburetor.
5. Immerse all the metal parts in a carburetor cleaning solution.
6. After the parts are cleaned, dry them with compressed air.
7. Blow out the fuel passages with compressed air.
8. Assemble the carburetor
9. Install the carburetor onto the motorcycle.

CAUTION:

1. The motorcycle will only operate properly if the carburetor top is installed properly with the mounting screws, cable and choke knob oriented as shown in figure 34.

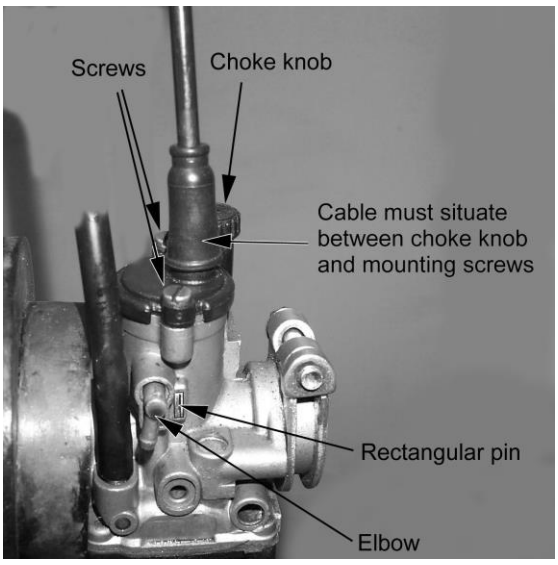

Figure 34 Proper carburetor top installation and location of rectangular slide indexing pin and vent elbows.

Reeds:

- The reeds must lay flat on the reed cage.
- If the reed tips aren't lying flat, replace them immediately.
- The reeds must have a tight seal on the reed cage.
- If the reed is damaged in any way, replace it. This means cracks, chips, and ruptures. Anything abnormal, replace the reeds.

Take the reed cage out and hold it up to the light and look in through the cage. If you see light between the reed pedals and the frame, then replace the reeds. If you do not see light, then the reeds should be ok. (See figure 35)

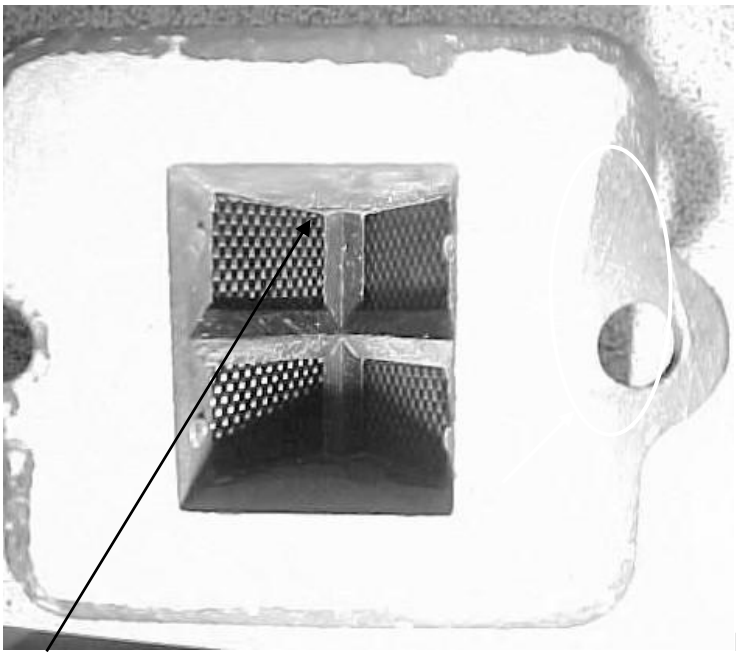

Figure 35

The presence of light indicates that the reeds should be replaced, or possibly turned over.

Exhaust

The pipe is a crucial element to a motorcycle. Any kinks, dents, or damage done to the pipe will result in a major performance loss.

NOTE:
Be sure to take the pipe off, and any carbon that may be built up. Carbon build up is created from exhaust. Exhaust has oils in it, and the oils cling to the walls of the inside of the pipe. Over a long period of time, the diameter of the pipe will decrease, due to carbon build up. So it is essential to clear the residue.

CAUTION:
It is important to repack the silencer. Signs of your silencer needing to be repacked are:

- The bike is louder than normal.
- A loss of power.

Wheels & Tires
Rear wheel pullers

Disassembly:

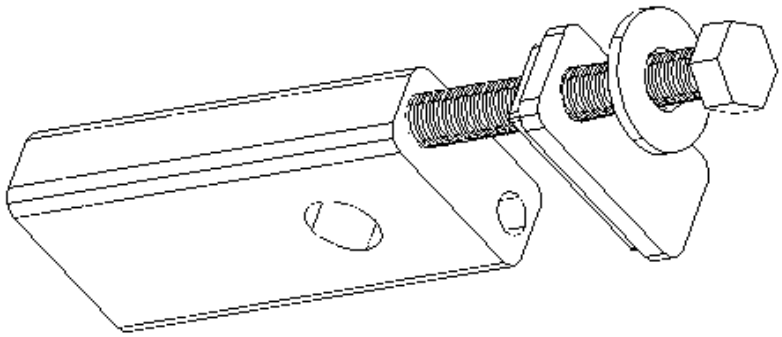

1. Remove axle, and back wheel assembly.
2. Pull the rear wheel pullers out of the back of the swing arm.

Figure 36

Rear wheel alignment:

Either

- Accurately measure the distance from the swingarm pivot to the axle center on each side or
- From the rear of the bike, sight up through both sprockets to ensure that the chain is running in a straight line (no bend in between or jog at either sprocket).

<u>Tuning</u>

Suspension

Adjustment:

1. Front forks
    - 1.1. Fork oil
        - 1.1.1. Oil type
            - 1.1.1.1. Heavier weight oil – more damping – slower responding
            - 1.1.1.2. Lighter weight oil – less damping – quicker responding
        - 1.1.2. Oil quantity / level
            - 1.1.2.1. Greater quantity / higher level – greater bottoming resistance, stiffer near the end of the travel.
            - 1.1.2.2. Smaller quantity / lower level – less bottoming resistance, less stiff near the end of the travel.
    - 1.2. Fork spring (optional spring)
        - 1.2.1. Stiffer spring (higher spring rate) – stiffer throughout the travel.
        - 1.2.2. Less stiff spring (lower spring rate) – less stiff throughout the travel.

1.3. Fork height
    1.3.1. Rise in clamps for quicker turning.
    1.3.2. Lower in clamps for improved straight line stability.
2. Rear shock
    2.1. Shock spring (optional spring)
        2.1.1. Stiffer spring – stiffer throughout the travel.
        2.1.2. Less stiff spring – less stiff throughout the travel.
    2.2. Compression damping (optional valve)
        2.2.1. Harder (more damping, slower) – adds resistance to the suspension motion when the suspension is compressing.
        2.2.2. Softer (less damping, quicker) – reduces resistance to the suspension motion when the suspension is compressing.
    2.3. Rebound damping (optional valve)
        2.3.1. Harder (more damping, slower) – adds resistance to the suspension motion when the suspension is returning to full length.
        2.3.2. Softer (less damping, quicker) - reduces resistance to the suspension motion when the suspension is returning to full length

Front Forks Bottoming Too Frequently **Fork oil level**

If the front forks bottom harshly more than a couple of times per lap and the fork springs are proper for the weight of rider (as detailed above), try raising the fork oil level in increments of 10mm. Raising the fork oil level, reduces the air volume, and increases the stiffness of the forks late in the travel, thus adding a progressive' feel.

Front forks feel too stiff over small bumps. **Fork oil weight**

If the forks feel too stiff over small bumps try decreasing the weight (increasing the viscosity) of the fork oil.

Rear suspension troubleshooting. **Damping**

Always start with standard settings and make damping changes in no more than two click increments and only make one change at a time.

Symptom	Action
Rear end feels stiff on small bumps	Softer compression damping
Rear end 'sways' on straights	Harder compression damping
Bike tends to jump 'rear end high'	Harder rebound damping
Bike tends to jump 'rear end low'	Softer rebound damping
Frequent rear end bottoming	Harder compression damping
Bottoms after end of continuous bumps	Softer rebound damping
Rear end 'kicks' over square edge bumps	1) Harder rebound, 2) Softer Compression

Proactive Suspension Adjustments

Once you have the suspension adjusted for decent overall feel, you can make proactive adjustments when faced with different racing conditions.

Situation	Actions
Sand track	Lower the rear end (increase race sag).
Sand track	Stiffer compression and rebound damping.
Long fast track	Lower the forks in the clamps by 3 mm.
Tight slow track	Raise the forks in the clamps by 3 mm.
Mud track	Lower the bike if the rider has difficulties touching the ground.

Rear shock

The rear shock on your Cobra is adjustable to your riders weight and riding style by changing the spring rate (stiffness) of the spring and / or by changing the damping valves.

Due to the complexities of the shock absorber internals, Cobra recommends that you either send the shock back to us for damping valve changes or send the shock to a competent suspension specialist such as PR^2.

Cobra offers stiffer and softer shock springs depending on the weight of your rider. See the Parts Shock section or the Optional component section at the beginning of the manual for these other components.

Front Forks

Cobra offers stiffer and softer fork springs depending on the weight of your rider. See the Parts Shock section or the Optional component section at the beginning of the manual for these other components.

The front forks are designed with the damping components in separate fork legs. The **compression damping** duties are performed in the **right fork leg** and the **rebound damping** duties are performed in the **left fork leg**. This allows easy adjustment of the damping characteristics by appropriately changing the viscosity of the fork oil in the fork leg controlling the damping characteristic that needs changed.

Example: if stiffer compression damping is required, switch from 20 (standard) weight fork oil to 25 or 30 weight oil in the right leg. If softer rebound damping is desired, switch from 20 (standard) to 15 or 10 weight fork oil in the left leg.

NOTE:
Fork oil level affects bottoming harshness, and oil viscosity affects valving speed.

Gearing

For a bike with a centrifugal clutch, it's better to be geared too low than too high.

What happens with improper gearing?

- Poor performance
- Not enough top end speed
- No snap
- Over heat clutch
- Premature failure of engine seals, bearings, & electronics
- High clutch wear

Condition	Gear Taller	Gear Lower
Mud		↓↓
Sand		↓
Hills		↓
Hard Pack	↑	
Throttle Blipper (novice)*	↑	

*It may be helpful to set up the clutch to hit early for smooth power delivery

Front Sprocket			Rear Sprocket	Gear Ratio
		15	33	2.20
		15	34	2.27
		15	35	2.33
	14		33	2.36
		15	36	2.40
	14		34	2.43
		15	37	2.47
	14		35	2.50
		15	38	2.53
13			33	2.54
	14		36	2.57
		15	39	2.60
13			34	2.62
	14		37	2.64
		15	40	2.67
13			35	2.69
	14	stock	38	2.71
		15	41	2.73
13			36	2.77
	14		39	2.79
		15	42	2.80
13			37	2.85
	14		40	2.86
13			38	2.92
	14		41	2.93
13			39	3.00
	14		42	3.00
13			40	3.08
13			41	3.15
13			42	3.23

Ratio Write © Cobra R&D 2004

Carburetion

Although your Cobra is sent from the factory with the carburetor jetted for optimal performance, you may find it necessary to adjustment your particular jetting due to current weather conditions, altitude, fuel variations, and/or engine modifications.

CAUTION:
Proper jetting is very important for engine performance and engine life. Symptoms of improper jetting are listed below.

- Symptoms of incorrect oil or oil / fuel ratio
    - Poor acceleration
    - Misfire at low engine speeds
    - Excessive smoke
    - Spark plug fouling
    - Excessive black oil dripping from exhaust system
- Symptoms of too rich a fuel mixture
    - Poor acceleration
    - Engine will not ‘rev’ out, blubbers on top
    - Misfire at low engine speeds
    - Excessive smoke
    - Spark plug fouling
    - Wet, black, or overly dark spark plug (when removed for inspection)
- Symptoms of too lean a fuel mixture
    - Pinging or rattling
    - Erratic acceleration
    - Same actions as running out of fuel
    - High engine temperature
    - White spark plug (when removed for inspection)

NOTE:
When inspecting the spark plug to evaluate jetting, a properly jetted machine will produce a spark plug that is dry and light tan in color.

Environmental and altitude related mixture adjustments		
Condition	**Mixture will be**	**Required adjustment**
Cold air	Leaner	Richer
Warm air	Richer	Leaner
Dry air	Leaner	Richer
Very humid air	Richer	Leaner
Low altitude	Standard	None
High altitude	Richer	Leaner
Low barometric pressure	Richer	Leaner
High barometric pressure	Leaner	Richer

NOTE:

- Before making any carburetor jetting changes verify that:
  - You are using the proper fuel and oil
  - The fuel is fresh and uncontaminated
  - The oil and fuel have been mixed in the proper ratio
  - The carburetor is clean (no plugged jets)
  - The air filter is properly clean and oiled
  - The float height is within proper specification (proper measuring technique is described later in this section)

NOTE:
Perform all jetting changes on a motorcycle that has been warmed up to proper operating temperature.

The carburetor on your Cobra motorcycle is quite adjustable. Figure 59 shows its range of adjustment and in particular what adjustable component affects what range of operation (specifically throttle position).

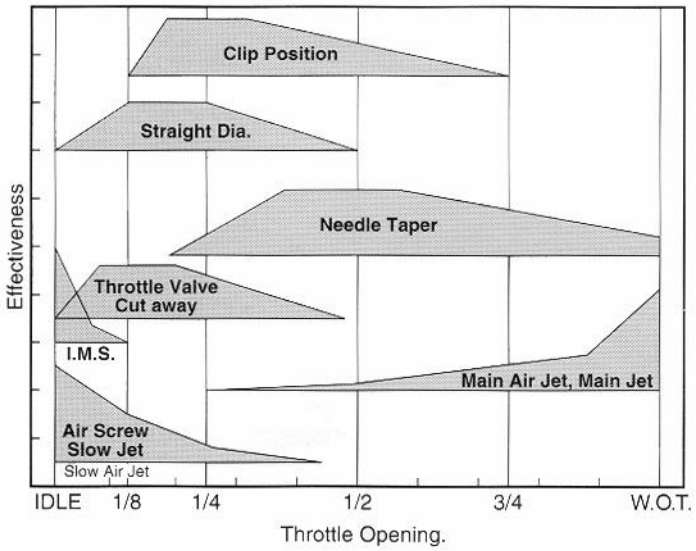

Figure 59

FUEL SCREW ADJUSTMENT: Adjust for maximum idle speed
The fuel adjustment screw is located on the left side of the carburetor. It is the smaller of the two adjustment screws and requires the use of a small flat blade screwdriver for adjustment. After adjusting for maximum idle speed, use the idle screw to adjust the desired idle speed.

NOTE:
If the fuel screw requires more than 3 turns out, replace the pilot jet for one that is one size richer (larger number) then re-adjust the fuel screw.

IDLE ADJUSTMENT: Adjust for desired idle speed
The idle speed screw is located on the left side of the carburetor. It is the larger of the two screws on the side of the carburetor and is unique with its knurled head for easy fingertip adjustment. To raise the idle, turn the screw in, clockwise, (in 1/4 turn increments) and rev the engine after each adjustment. To lower the idle, turn the screw counter-clockwise.

TOP END JETTING: **Adjust for clean full throttle acceleration**
Jet your top end (main jet) based on the acceleration of your Cobra Motorcycle on the longest straight at the track. Observe any of the lean or rich symptoms (spark plug appearance and bike performance) listed above and change your jetting accordingly.

PART THROTTLE **Adjust for desired acceleration**
Using an area of the track that allows the rider to operate and mid throttle and transition (accelerate, or 'roll on') from closed, or mostly closed throttle, to a larger throttle opening. Observe the rich and lean symptoms listed above. Adjust the jet needle position by moving the clip from its current position (move the clip higher on the needle to make the bike run leaner, or move the clip lower on the needle to make the bike run richer) to one higher or lower.

Troubleshooting

1) **Engine not behaving properly**
   a) Carburetor top is installed backwards (happens a lot)
   b) The carburetor slide indexing pin is missing
   c) Wrong spark plug installed (8339 Champion to be used on '04 or later & no mods)
   d) Needle clip is on top of plastic not below
   e) Air leak – find where with carb cleaner or similar
   f) Ground wire or ignition leads have fault
2) **Engine is down on power**
   a) Clutch engagement is not set properly
   b) Jetting is incorrect
   c) Silencer needs repacked
   d) Exhaust pipe
      i) Has excess carbon buildup
      ii) Has large dent in it
   e) Compression is low
      i) Piston
      ii) Rings
   f) Reeds are damaged
   g) Ignition timing is incorrect
3) **Engine is excessively loud**
   a) Silencer needs to be repacked

4) **Engine cuts out at high RPMs**
   a) Stator bad
   b) Carburetor diffuser plate upside down (install like a skirt)
   c) Plugged fuel petcock
   d) Silencer core tube broken
5) **Engine won't start**
   a) Fuel
      i) None in tank
      ii) Is sour or bad
   b) Carburetor is dirty
   c) Ignition
      i) Spark plug fouled
      ii) Wrong spark plug installed (8339 Champion to be used on '04 or later & no mods)
      iii) Spark plug cap off
      iv) Engine Shut-off 'kill' switch is shorted
      v) Bad electrical ground
      vi) Stator winding damaged
   d) Exhaust is plugged
6) **Overheating**
   a) Bad stator
   b) Water pump pulleys or belt broken
   c) Water pump impeller broken or bolt out
   d) Jetting too lean
   e) Too much throttle blipping
   f) Too high gearing
   g) Kinked radiator hose
   h) Rear brake dragging
   i) Chain too tight
   j) Air leak
7) **Engine won't idle**
   a) Idle knob needs adjusted
   b) Air leak
   c) Carburetor jets are dirty

Index

Air Filter Maintenance 14
Airbox
  Parts 17
Bars and Controls 18
Base Gasket Selection..... 40
Break-In 8
Carburetor
  Parts 19
  Service 56
  Specifications 5
  Tuning 65
CFD Cobra Frictional Drive 16
Chain
  Adjustment 14
Chassis
  Specification 5
Clutch
  Parts 23
  Service 46
Clutch Lubricant
  Replacing 12
Compression test 39
Cooling System 53
Electrical
  Parts 21
Engine
  Parts List 18
  Specifications 5
Exhaust 59
  Parts 26
Fork Oil
  Replacement 15
Forks
  Parts 27
Frame Parts 29
Frictional Drive 16
Front Brake
  Parts 32
Front Forks
  Service 62
Front Forks: 62
Front Wheel Parts 33
Fuel System
  Service 56
Gearing 63
Hardware and Fasteners
  Frame 29
  Plastic 34
Ignition
  Parts 24
  Service 51
  Timing 52
Jetting
  How To 57
  Stock 5
  Troubleshooting 65
Lubrication
  Recommended 5
Maintenance
  Schedule 10
  Tips 10
Oil

Recommended 5
Optional Components 7
Parts
Airbox and Filter 17
Bars and Controls..... 18
Bottom End & Transmission..... 22
Carburetor 19
Clutch & Kick Starter 23
Coolant System 20
Electrical..... 21
Engine 22
Exhaust 26
Forks 27
Frame 29
Front Brake..... 32
Front Wheel..... 33
Ignition & Water Pump 24
Inlet 17
Plastic & Seat 34
Rear Brake 35
Rear shock 62
Rear Wheel 36
Shock 37
Swingarm 38
Top End..... 25
Triple Clamps 27
Parts List
Engine 18
Front Forks 62
Plastic & Seat Parts 34
Pullers..... 60
Rear Brake
Parts 35
Rear Wheel
Parts 36
Pullers.....60
Reeds.....58
Shock 62
Parts 37
Service.....67
Slip Clutch 16
Spark Plug
Recommended 5
Specifications 5
torque values 6
Starting.....9
Suspension 67
Swingarm Parts.....38
Top End
Parts 25
Service.....39
Torque Values.....6
Transmission
Specifications 5
Transmission Lubricant
Replacing.....12
Troubleshooting 67
Jetting 65
VIN reading 11
WARNING.....2
Water Pump
Parts 24
Wheels
Service.....60